Assembly Instructions

Your product comes package, carefully remove all of the components from the packing and set aside for assembly. Assemble on a soft surface to prevent scratching the finishing during assembly.

CAUTION:

Tighten all components securely before use. Failure to do so may result in personal injury.

DO NOT use any sharp objects to open plastic wrapped components as damage to product or components may result.

WARNING

Injury may result from tipping furniture.

You must install the Tipping Restraint Hardware with the until to preset the unit from tipping and causing any accidental injury, stability, death or damage. The tipping restraint is intended only as a safety measure, it is not a substitute for proper adult supervision.

This ripping restraint is not an earthquake restraint. If you wish to add the extra security of earthquake restraints, they must be purchased and installed separately. Do not allow children to climb on furniture.

Failure to detach this restraint before moving furniture may result in injury and damage.

AVERTISSEMENT
Le basculement du meuble peut entrainer des blessures
Vous devez installer la quincaillerie antibasculement pour éviter que l'unité bascule.et cause des blessures accidentelles, 'invalidité. la mort ou des dommages.
La quincaillerie antibasculement est unt moyen de protection. Elie ne constitue .pas un substitut à la supervision d'un adulte. La quincaillerie antibasculement ne constitue pas un dispositif antisismique.Si yous voulez obtenir la sécurité accrue que procure un dispositif antisismique, yous devez l'acheter séparément et l'installer. Ne laissez jamais les enfants monter sur le meuble. Tout défaut de détacher la quincaillerie avant de déplacer le meuble peut causer
des blessures et des dommages.

ADVERTENCIA
Una lesión puede ser resultado por inclinación de muebles.
Debe instalar el juego de restricción de movimiento con la unidad funcionando para evitar.que la unidad se vuelque y causar alguna lesión accidental, invalidez, muerte o daños.
La restricción está destinada sólo como una medida de seguridad, no es un sustituto. de la supervisión de un adulto.
La restricción no es recomendable para usar como restricción contra terremoto. Si desea agregar mayor seguridad de restricciones contra terremoto, deben comprarse e instalarse por separado.No permita que los niños se suban a los muebles. El no desconectar este sistema de seguridad antes de mover los muebles. pueden producir lesiones y daños.

Faux Wood Adirondack Chair

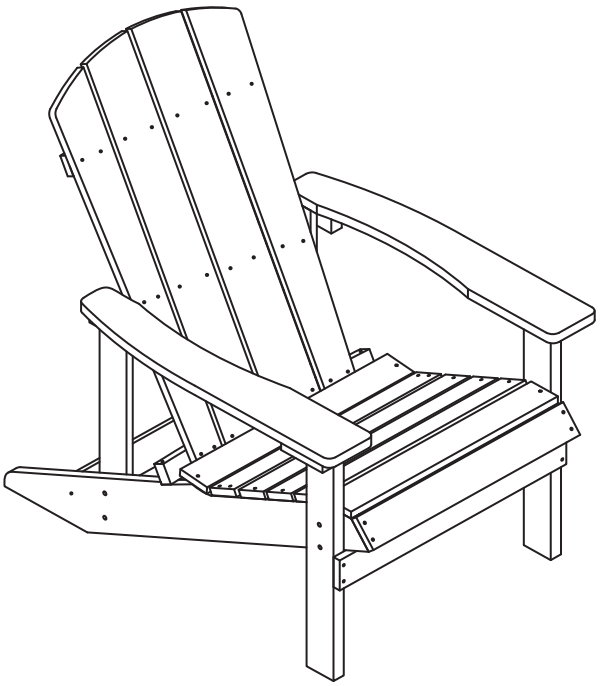

Made in China

Safety Information

DANGER: Please keep children out of the assembly area during assembly.

WARNING: Do not stand on the chairs. Do not sit on the armrests.

CAUTION: Use the chairs on flat ground only.

Pre-Assembly

TOOLS REQUIRED (not included)

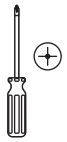

Phillips screwdriver

HARDWARE INCLUDED

NOTE: Hardware not shown to actual size.

_____AA

_____BB

_____CC

_____DD

_____EE

Part	Description	Quantity
AA	Screw (3.5x40)	6
BB	Bolt (M6x60)	2
CC	Bolt (M6x70)	2
DD	Bolt (M6x60)	6
EE	Bolt (M6x45)	4

Pre-Assembly (continued)

PACKAGE CONTENTS

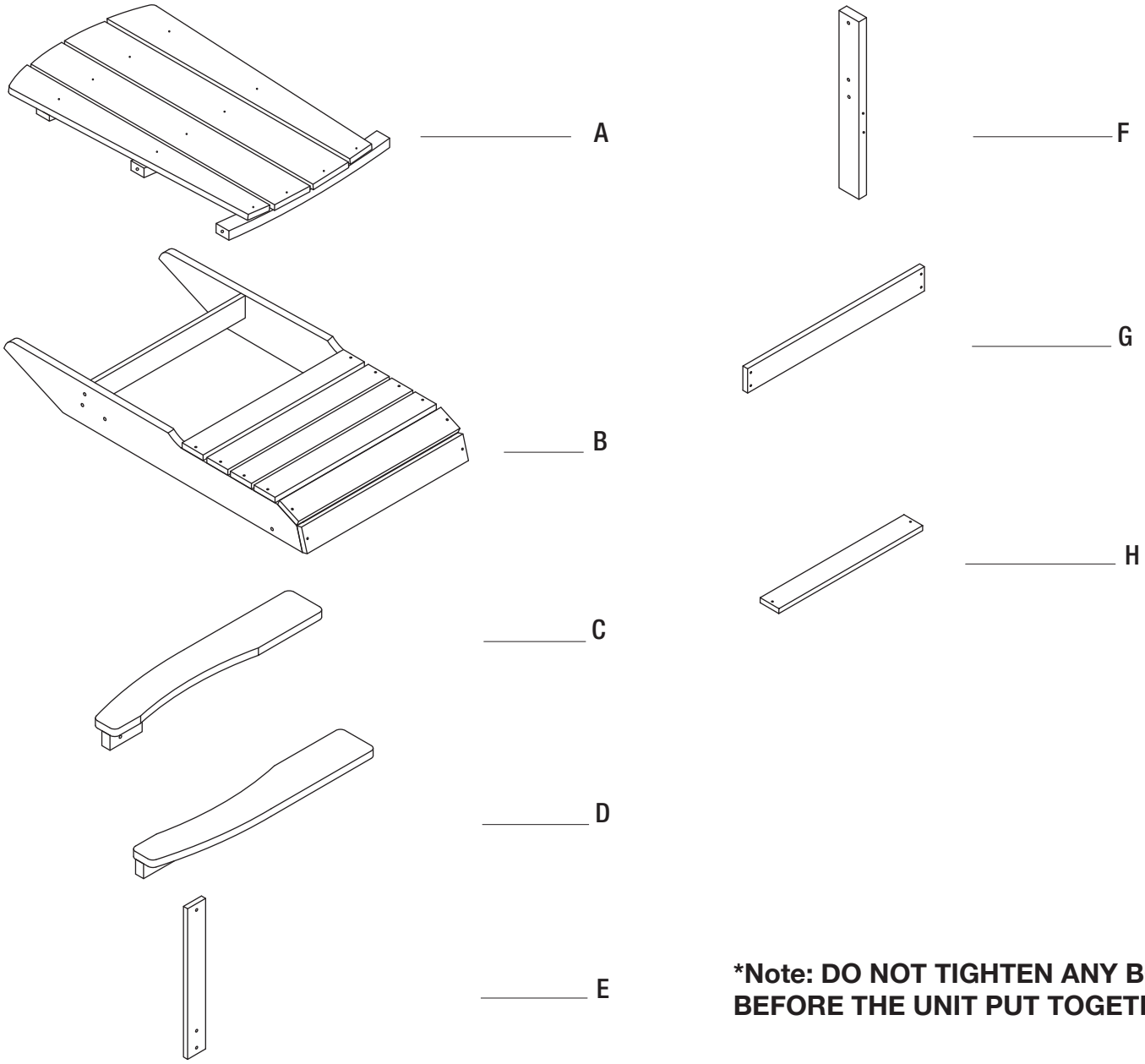

***Note: DO NOT TIGHTEN ANY BOLTS BEFORE THE UNIT PUT TOGETHER.**

Part	Description	Quantity
A	Back	1
B	Seat	1
C	Left armrest	1
D	Right armrest	1
E	Vertical Back Support	2

Part	Description	Quantity
F	Front Legs	2
G	Front Leg Cross Beam	1
H	Rear Seat Slat	1

Assembly

1 Attaching the rear seat slat

- ☐ Attach the rear seat slat (H) to the seat (B) with screws (AA).

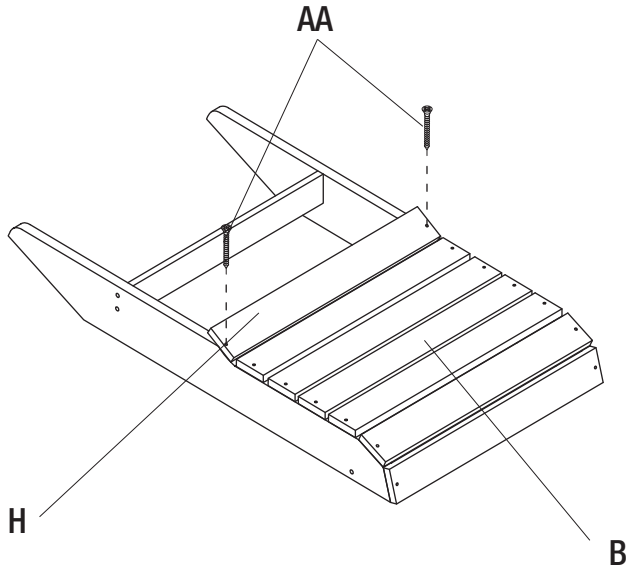

2 Attaching the front legs

- ☐ Attach the front legs (F) onto the seat (B) with Bolts (DD).
  Attach Vertical Back Support (E) onto the Seat with Bolts (EE).

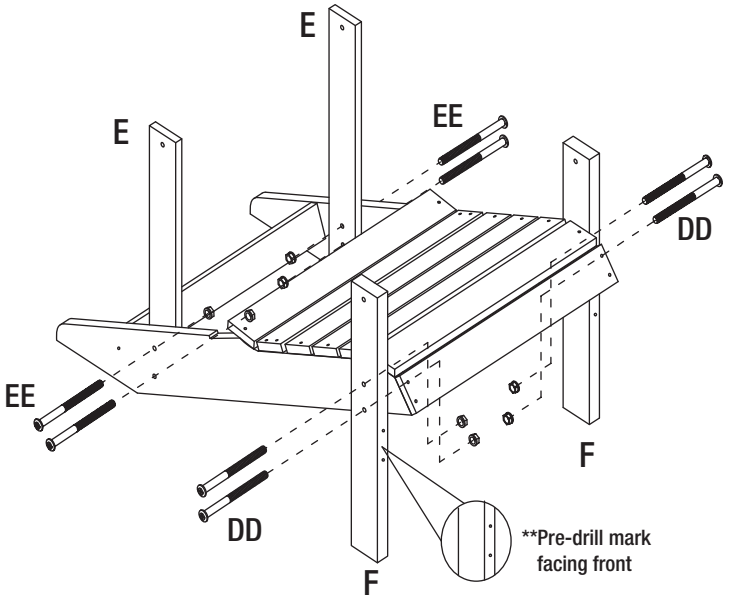

3 Attaching the cross board

- ☐ Attach the Cross Beam (G) to the front legs (F) with screws (AA).

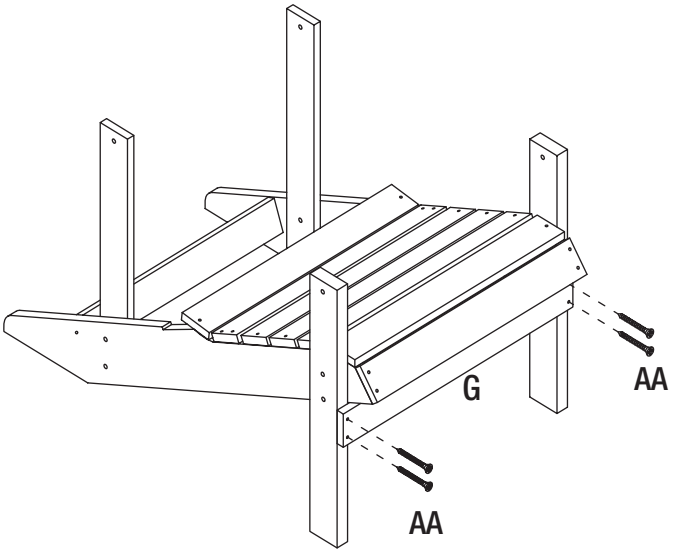

4 Attaching the Hinge

- ☐ Attach the Back (A) to the Seat (B) with Bolts (BB).
  Attach the Armrest (C & D) to the Front Legs with Bolt (DD).
  Attach th Armrest to the Vertical Back Support (E) with Bolt (CC).

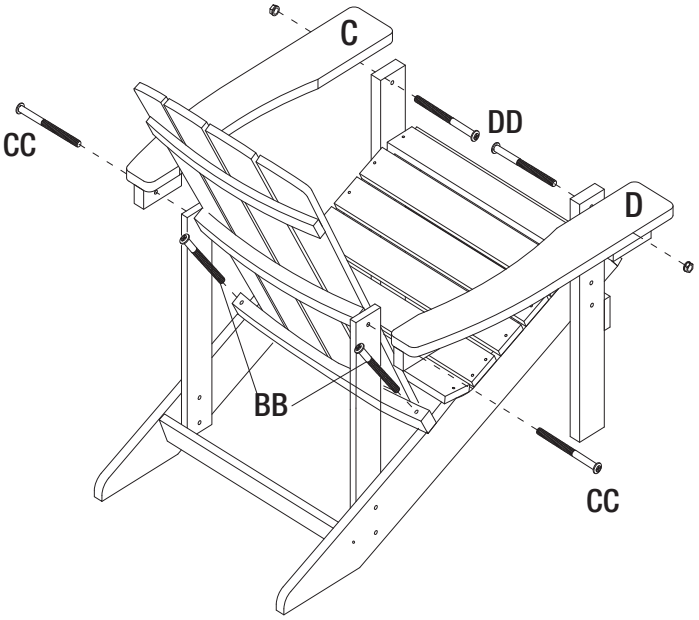

Thank you for your purchase!

Fire Pit

ASSEMBLY INSTRUCTIONS

Before You Begin:

Please identify all component parts and hardware pieces required before you begin. Carefully remove all of the components from the packaging and set aside for assembly. Assemble on a soft surface to prevent scratching during assembly.

Caution:

Tighten all components securely before use. Failure to do so may result in personal injury.
DO NOT use any sharp objects to open plastic wrapped components as damage to product or components may result.

Warning:

CHOKING HAZARD - Small Parts. Adult Assembly Required.

Injury may result from tipping this firepit.

PANELS AND FITTINGS IDENTIFICATION:

	PARTS	QTY
A		1PC
B	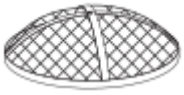	1PC
C		1PC

	PARTS	QTY
D		4PC
E		3PC

HARDWARE LIST:

	PARTS	QTY
1		14PC
2		11PC

STEP-BY-STEP ASSEMBLY INSTRUCTIONS

★ **When applicable, tighten all hardware connections by hand first.**

★ **Once this step is completed, go back and fully tighten all hardware.**

★ **Follow all steps, in order, to properly assemble the product.**

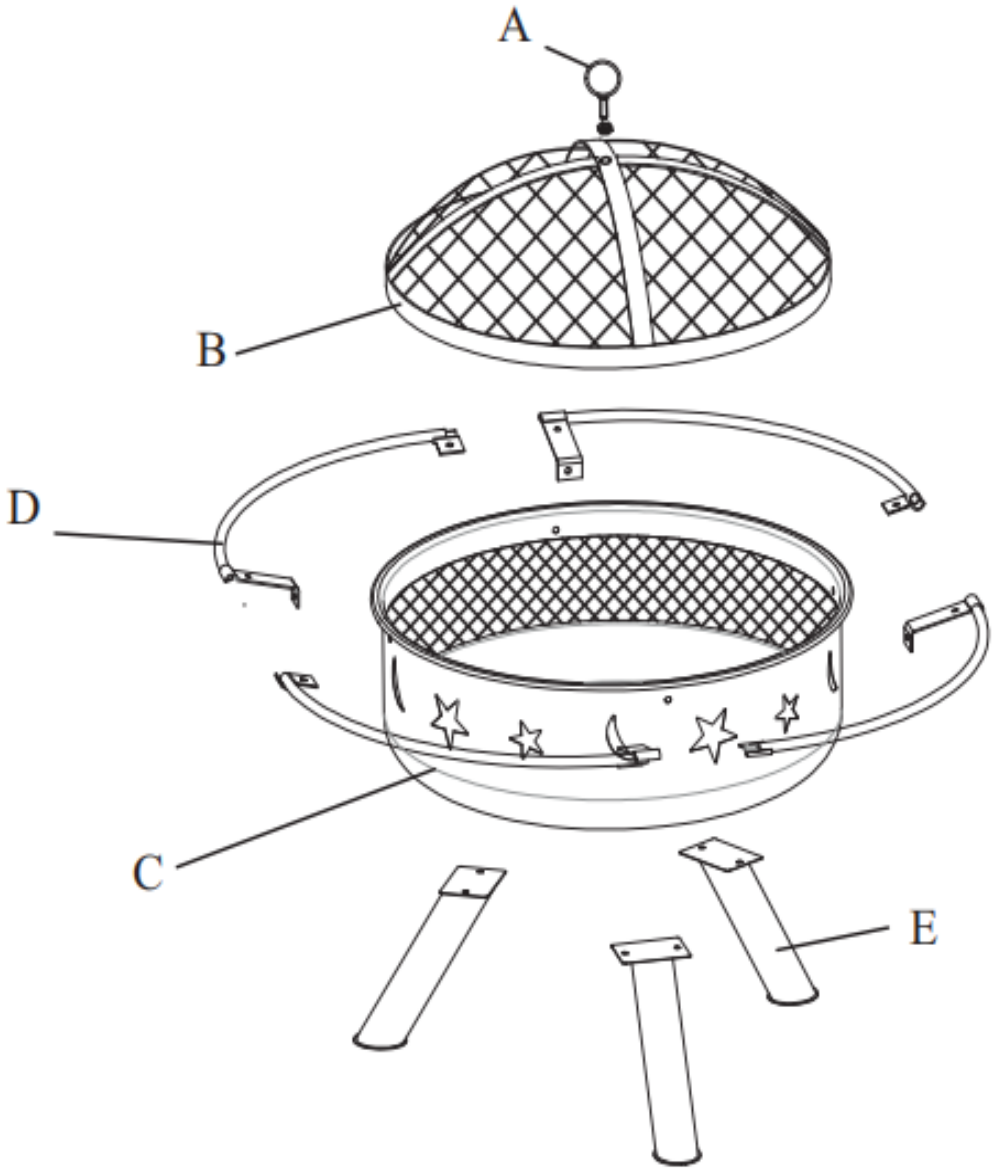

Step: 1

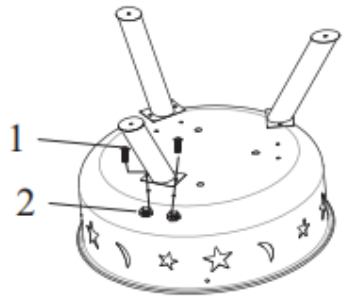

1 & 2: x 6

Step: 2

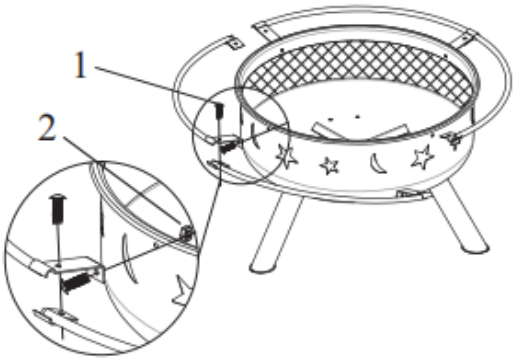

1 & 2: x4

1: x4

Step:3

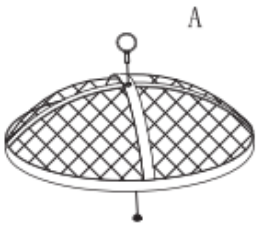

2: x 1

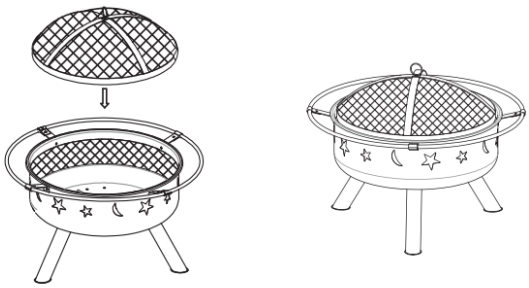

WARNING

FOR YOUR SAFETY

1. This appliance is for outdoor use only, and shall NOT be used in a building, garage, or any other enclosed area.
2. Do NOT use this outdoor fireplace for indoor heating. TOXIC carbon monoxide fumes can accumulate and cause asphyxiation.
3. This is not intended for commercial use.
4. This outdoor fireplace is NOT to be operated by children.
5. Please do not use the fire pit on boats or recreational vehicles.
6. When using this outdoor fireplace, exercise the same precautions you would with any open fire.
7. The use of alcohol, prescription or non-prescription drugs may impair the consumers ability to properly assemble or safely operate this outdoor fireplace.
8. Do NOT use this outdoor fireplace without reading the entire "Instruction Manual".
9. This outdoor fireplace is for use with dry, seasoned hardwood. It will bum hotter, more completely and create less smoke.
10. Do NOT burn charcoal briquettes, lump charcoal, manufactured logs, driftwood, trash, leaves, paper, cardboard, plywood, painted or stained or pressure treated wood. Avoid using softwoods such as pine or cedar that can throw sparks.
11. Do NOT alter this outdoor fireplace in any manner.
12. Do NOT use this outdoor fireplace until it is COMPLETELY assembled and all parts are securely fastened and tightened.
13. Do NOT store or use gasoline or other flammable vapors or liquids in the vicinity of this or any other appliance.
14. Do NOT store or use an LP gas cylinder within 10 feet (3.05 m) of this outdoor fireplace while it is in operation.
15. Do NOT use this outdoor fireplace near automobiles, trucks, vans or recreational vehicles.
16. Do NOT use in a combustible environment. Keep outdoor fireplace area clear and free from ignitable materials, gasoline and other flammable liquids.
17. Do NOT use this outdoor fireplace under any overhead or near any unprotected combustible construction. Avoid using near or under overhanging trees and shrubs.
18. Always use this outdoor fireplace on a hard, level non-combustible surface such a concrete, rock or stone. An asphalt or blacktop surface may not be acceptable for this purpose. Do NOT use on wooden decks.
19. Always empty this outdoor fireplace before each use.
20. Do NOT wear flammable or loose clothing when operating this outdoor fireplace.
21. Do NOT use in windy conditions.
22. Do NOT use this outdoor fireplace unless spark guards are securely in place.
23. Do NOT use gasoline, kerosene, diesel fuel, lighter fluid or alcohol to light or relight fires.
24. Keep all electrical cords away from a hot fireplace.
25. All surfaces of this outdoor fireplace are hot when in operation. To avoid burns, do NOT touch fireplace until it has completely cooled unless you are wearing protective gear (Potholders, gloves, BBQ mittens, hot pads etc.). Never touch ashes or coals to see if they are hot.
26. Do NOT leave a lit outdoor fireplace unattended, especially around children and pets.
27. Do NOT attempt to move or store this outdoor fireplace until all ashes and coals are completely extinguished.

28. Do NOT remove ashes or coals until they are completely and fully extinguished.
29. Use heat-resistant gloves or hot pads when contacting handles.
30. Use long, sturdy fireplace tools when adding or moving logs.
31. Do NOT place wood directly into bottom of the outdoor fireplace. Place wood only on the wood grate.
32. Do NOT overload the fireplace. Do not add additional firewood until the fire burns down. NOTICE: If any portion of the bowl, lid or spark guards of this outdoor fireplace are glowing red it is overloaded.
33. Do NOT lean over this outdoor fireplace when lighting or when in use.
34. Do NOT place a hot spark guard or hot fireplace tools onto combustible surfaces such as grass, wooden deck or furniture.
35. Avoid breathing smoke from the fire and avoid getting it into your eyes.
36. This outdoor fireplace should be thoroughly inspected and cleaned on a regular basis.
37. After a period of storage and/or non-use, check for signs of damage and creosote build-up. Do NOT operate until necessary repairs and/or cleanup are executed.
38. Use only factory authorized parts. The use of any part that is NOT factory authorized can be dangerous.
39. Do not force parts together as this can result in personal injury or damage to the product.
40. Deaths, serious injury or damage to property may occur if the above is not followed exactly.

OPERATING INSTRUCTION:

Lighting

1. Make sure there is no more than a small amount of ash in the bottom of the bowl.
2. Place a layer of dry kindling or a natural fire starter onto the center of the grate.
3. Place above that a layer of dry seasoned hardwood that is cut to lengths no more than 3/4 the diameter of the bowl.
4. Use a match to light kindling or fire starter.
5. Using a hook and heat resistant gloves, replace spark guard once the kindling or fire starter is lit.

Tending the Fire

You may need to shift and/or add logs for an ideal experience.

Do NOT place a hot spark guard or hot fireplace tools onto combustible surfaces such as grass, wooden deck or furniture.

1. Using a hook and heat resistant gloves, carefully remove spark guard.
2. While using a long-handled fireplace tool, shift coals and logs to allow additional airflow.
3. Do NOT add gasoline, kerosene, diesel fuel, lighter fluid or alcohol to relight or enhance an existing fire.
4. Wait until glowing coals have developed before adding any additional wood. If additional wood is required, place wood on top coals. Be careful not to shift ashes.
5. Using a hook and heat resistant gloves, replace spark guard.

Extinguishing

1. Allow fire to burn out on its own.
2. Do NOT use water to extinguish as this is dangerous and can cause damage to this outdoor fireplace.

Inspecting

This outdoor fireplace should be inspected on a regular basis to ensure product safety and longer product life.

Do NOT attempt to inspect this outdoor fireplace until the fire is COMPLETELY out

1. Check handles to make sure they are secure.
2. Check components for any signs of damage or rust.
3. If damage to any component is detected, do NOT operate until repairs are executed.

Cleaning

This outdoor fireplace should be cleaned on a regular basis to promote safer experiences and longer product life. Note: After repeated use, a slight discoloration of the finish may occur.

Do NOT attempt to clean this outdoor fireplace until the fire is COMPLETELY out.

Do NOT use oven cleaner or abrasive cleaners as they will damage this product.

Do NOT clean any part of this outdoor fireplace in a self-cleaning oven as it may damage the finish.

Do NOT use a pressure washer to clean this outdoor fireplace, as this may damage this product

1. Wipe exterior surfaces with a mild dishwashing detergent or baking soda.
2. For stubborn surfaces use a citrus based degreaser and a nylon scrubbing brush.
3. Rinse clean with water.
4. Remove built-up creosote from base, hood and spark guards with a chimney cleaning product

Storage

Do NOT move or store this outdoor fireplace until the fire is COMPLETELY out.

1. Once the fire is out, coals are cold and outdoor fireplace is cool to the touch, remove ashes and properly dispose.
2. Cover the outdoor fire pit with the enclosed cover when it is not in use.
3. Store assembled in a location away from children and pets.

⚠WARNING

This product can expose you to chemicals including carbon monoxide which is known to the State of California to cause birth defects or other reproductive harm. For more information go to www.P65Warnings.ca.gov.

WARNING

⚠ **FOR YOUR SAFETY**

For Outdoor Use Only (outside any enclosure)

WARNING

⚠ **FOR YOUR SAFETY:**

1. Improper installation, adjustment, alteration, service or maintenance can cause injury or property damage.
2. Read the installation, operation, and maintenance instructions thoroughly before installing or servicing this equipment.
3. Failure to follow these instructions could result in fire or explosion, which could cause property damage, personal injury, or death.