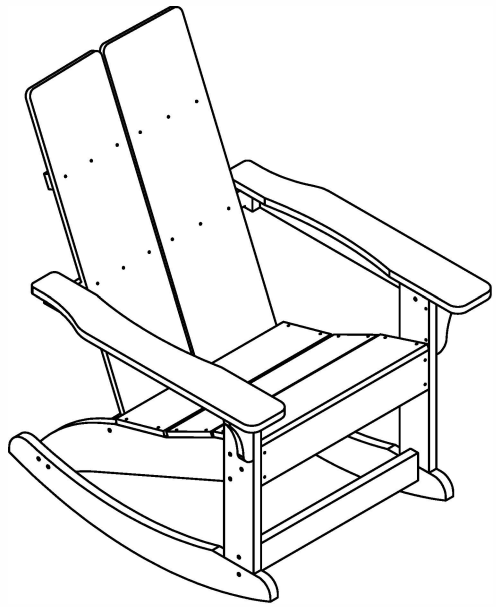

Thank you for your purchase!

Modern All-Weather Rocking Adirondack Chair

ASSEMBLY INSTRUCTIONS

Before You Begin:
Please identify all component parts and hardware pieces required before you begin. Carefully remove all of the components from the packaging and set aside for assembly. Assemble on a soft surface to prevent scratching during assembly.

Caution:
Tighten all components securely before use. Failure to do so may result in personal injury.
DO NOT use any sharp objects to open plastic wrapped components as damage to product or components may result.

Warning:

CHOKING HAZARD - Small Parts. Adult Assembly Required.

DO NOT ALLOW CHILDREN TO CLIMB ON FURNITURE

Serious or fatal injuries can occur from furniture tipping over. You must install Tipping Restraint Hardware (where included) to help prevent the unit from tipping and causing accidental injury, instability, death or damage. The tipping restraint is intended only as a safety measure, it is not a substitute for proper adult supervision.

To help prevent furniture from tipping over it must be permanently attached to the wall. Anti-Tip Safety Wall Straps suitable for the unit weight and wall materials (if not included) should be purchased and installed.

Our Warranty Statement

This warranty covers manufacturing defects associated with your new product. The product is warranted from the original purchase date and to the original purchaser for normal usage, according to the below-referenced specifications and limitations.

- Non-moving metal parts are warranted for 5 years.
- Component parts including pneumatic cylinder, control mechanism, base and casters are warranted for 2 years.
- All other items are warranted for 1 year.

Normal usage means use in compliance with the restrictions and weight limits specified for the product. In the absence of product-specific restrictions and weight limits, normal usage means use for no more than forty hours per week by persons weighing 250 lbs. or less. Coverage terminates if the product is sold or otherwise transferred. Repairs made by parties other than Belnick also void this warranty.

This warranty will not cover: (1) labor, freight, or damage from misuse, abuse, negligence, alteration, assembly, installation, attachments, accident, vandalism, acts of nature or any other event beyond the control of Belnick; (2) tearing, scratching, scuffing, or blemishing of leather or fabric; (3) cosmetic damage that may result from normal usage; (4) damage attributable to use by persons exceeding specified weight limits or commercial use exceeding forty hours per week; or (5) rust or other damage caused by exposure to moisture. The user assumes all risk of injury resulting from use of this product. Liability for incidental or consequential damage is excluded. Some states do not allow the exclusion or limitation of incidental or consequential damages, so the above limitation or exclusion may not apply to you.

PARTS

A	Backrest	1PC	E	Left Leg	1PC
			F	Right Leg	1PC
B	Seat	1PC	G	Front Crossbeam	1PC
C	Left Arm	1PC	I	Rear Crossbeam	1PC
D	Right Arm	1PC	J	Rockers	2PCS

Hardware Included

AA

BB

CC

DD

EE Allen Wrench

Part	Description	Quantity
AA	M6*50 Bolt	2
BB	M6*60 Bolt	4
CC	M6*60 Bolt	10
DD	M6*80 Bolt	4

STEP 1

STEP 1: Attach the Left Leg (Part E) and Right Leg (Part F) to the Seat (Part B) using (6) M6*60 Bolt and Nut Sets (Part CC). Hand tighten bolts.

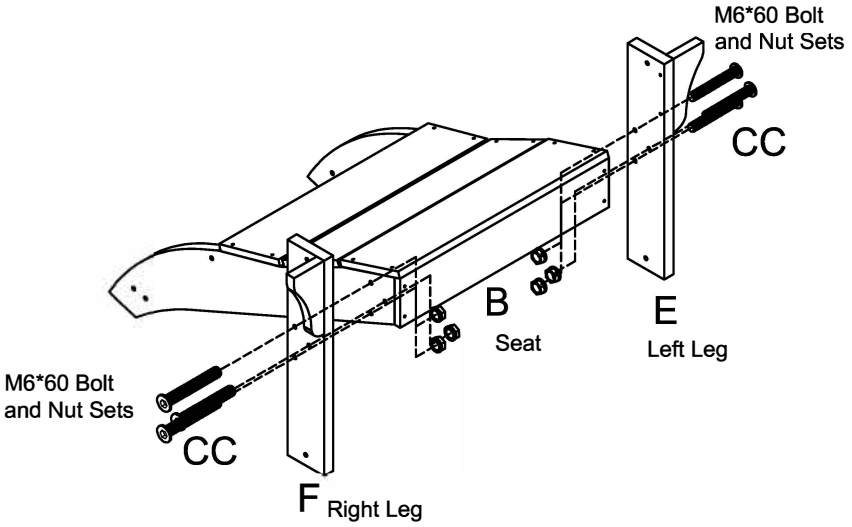

STEP 2

STEP 2: Attach the front of the Rockers (Part J) to the Left and Right Legs (Parts E&F) and Front Crossbeam (Part G) using (2) M6*60 Bolts (Part BB). Hand tighten bolts.

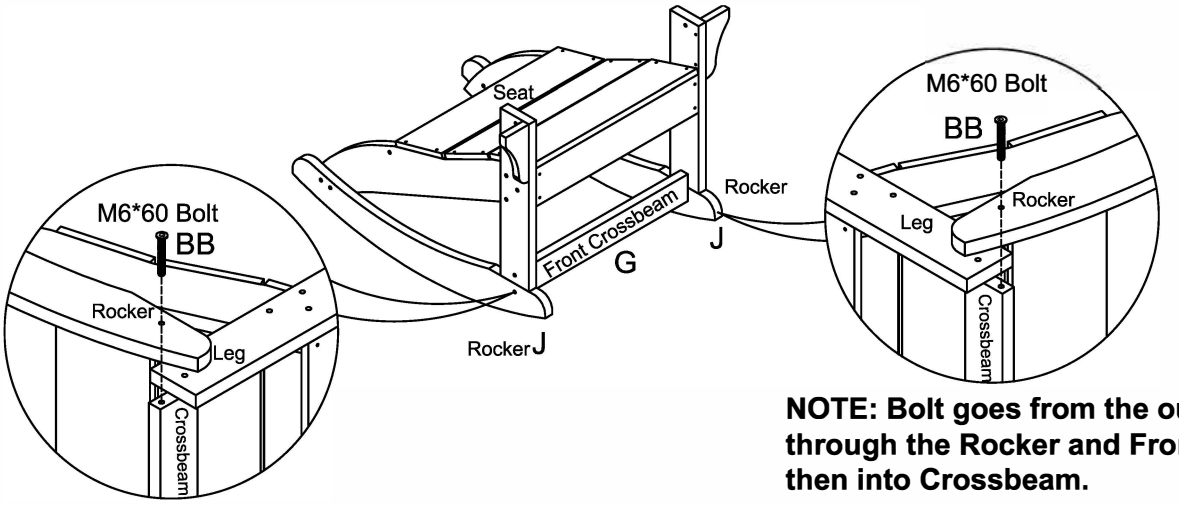

NOTE: Bolt goes from the outside through the Rocker and Front Leg then into Crossbeam.

STEP 3

STEP 3A: Attach the back of the Rockers (Part J) to the seat (Part B) using (2) M6*60 Bolt and Nut Sets (Part CC).

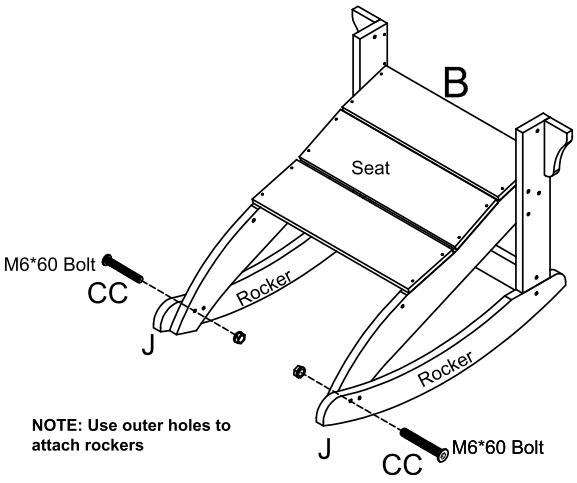

STEP 3B: Attach Rear Crossbeam (Part I) to the Rockers (Part J) and Seat (Part B) using (2) M6*80 Bolts (Part DD).

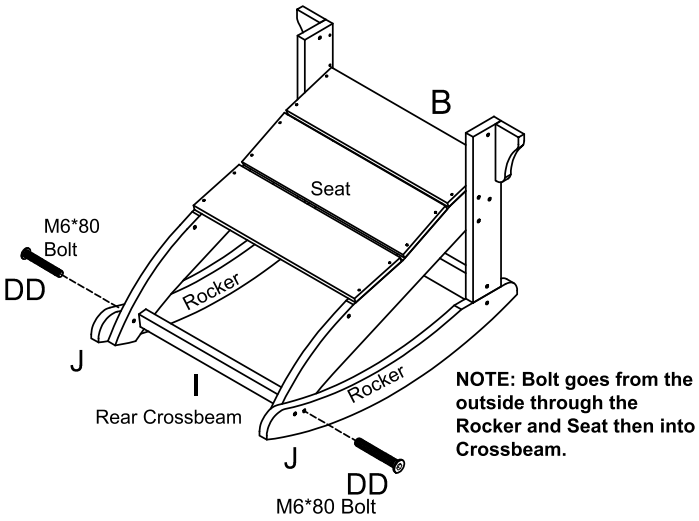

STEP 4

STEP 4: Attach the Left Arm (Part C) and Right Arm (Part D) to the Legs (Parts E&F) using (2) M6*60 Bolt and Nut Sets (Part CC)

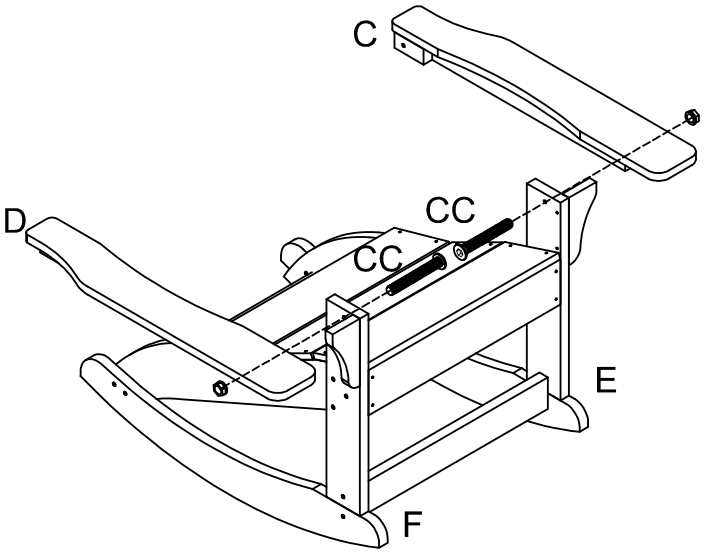

STEP 5

STEP 5A: Attach the bottom of the Backrest (Part A) to the Seat (Part B) using (2) M6*50 Bolts (Part AA).

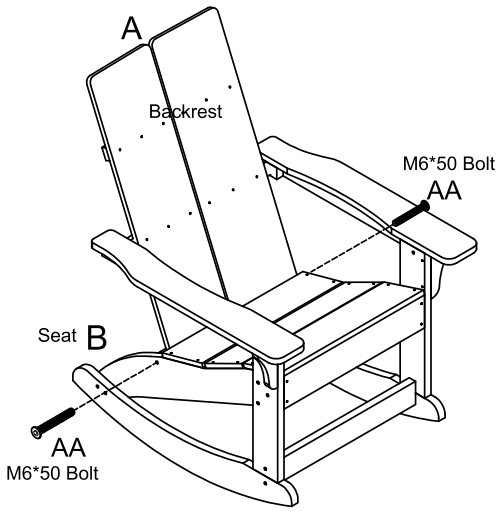

STEP 5B: Attach the Left Arm (Part C) and Right Arm (Part D) to the backrest (Part A) using (2) M6*80 Bolts (Part DD)

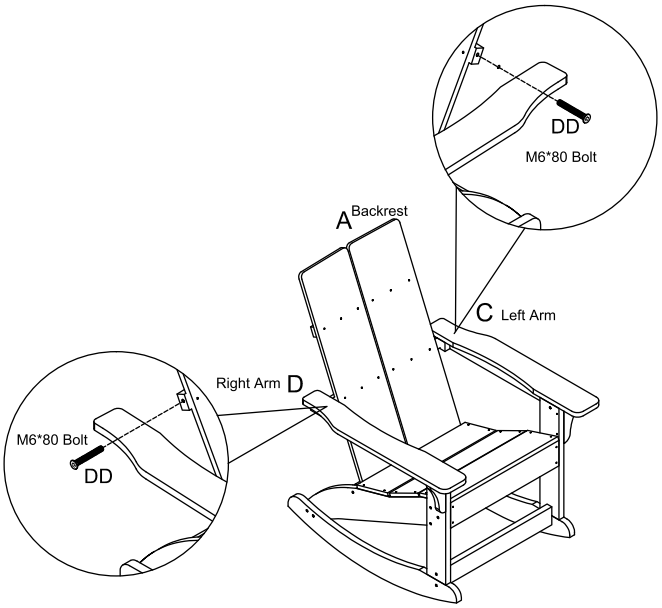

STEP 6

Tighten all bolts with Allen Wrench (Part EE).

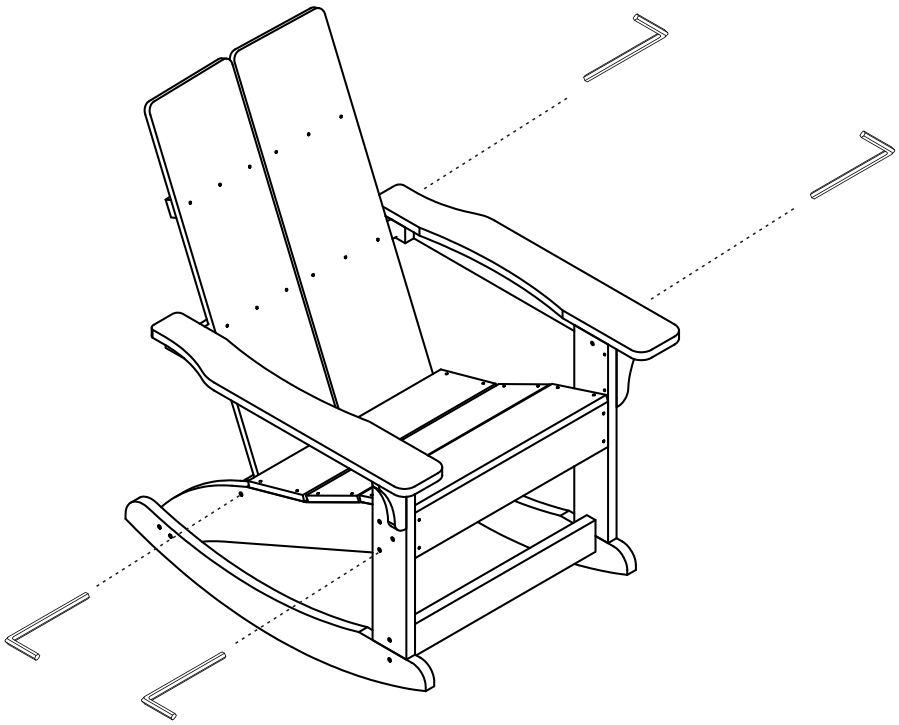

Thank you for your purchase!

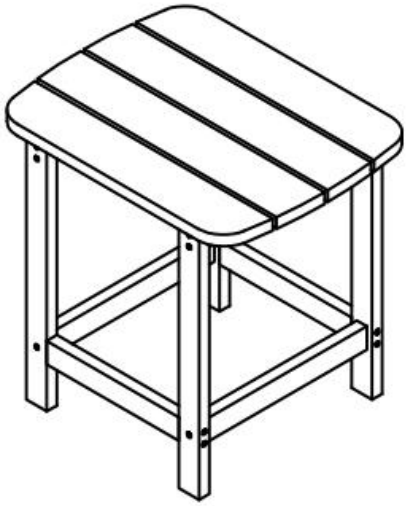

Polystyrene Adirondack Side Table

ASSEMBLY INSTRUCTIONS

Before You Begin:
Please identify all component parts and hardware pieces required before you begin. Carefully remove all of the components from the packaging and set aside for assembly. Assemble on a soft surface to prevent scratching during assembly.

Caution:
Tighten all components securely before use. Failure to do so may result in personal injury.
DO NOT use any sharp objects to open plastic wrapped components as damage to product or components may result.

Warning:

CHOKING HAZARD - Small Parts. Adult Assembly Required.

DO NOT ALLOW CHILDREN TO CLIMB ON FURNITURE

Serious or fatal injuries can occur from furniture tipping over. You must install Tipping Restraint Hardware (where included) to help prevent the unit from tipping and causing accidental injury, instability, death or damage. The tipping restraint is intended only as a safety measure, it is not a substitute for proper adult supervision.

To help prevent furniture from tipping over it must be permanently attached to the wall. Anti-Tip Safety Wall Straps suitable for the unit weight and wall materials (if not included) should be purchased and installed.

PARTS

A	Table Top	1PC	B	Left & Right Legs 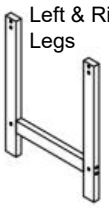	2PCS	C	Front & Back Leg Supports	2PCS

Hardware Included

AA	6*35MM	12PCS			

STEP 1

Attach the legs (Part B) to the table top (Part A) with 6*35 MM bolts (Part AA)

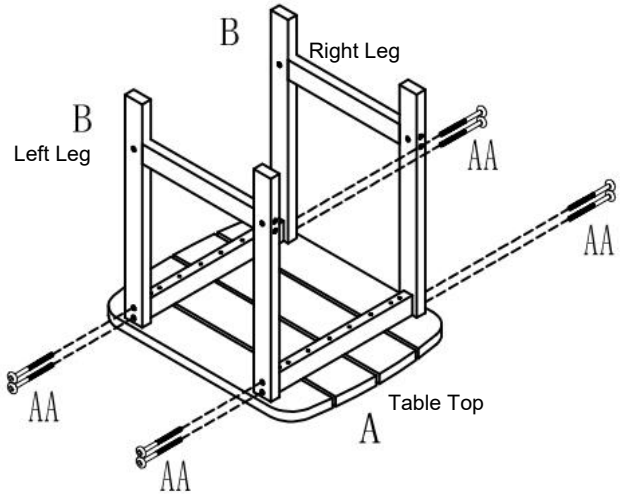

STEP 2
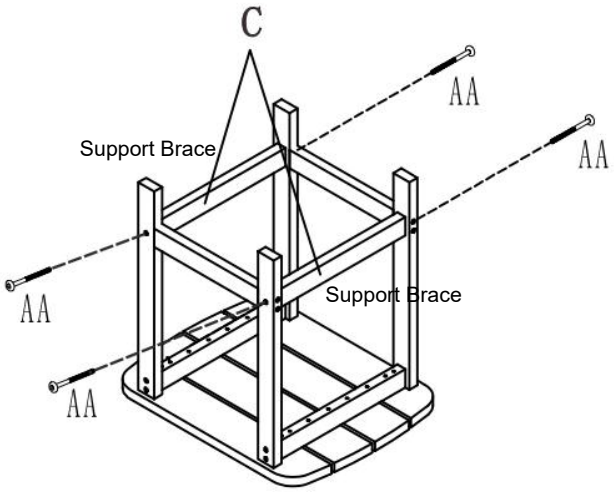
Attach the front and back leg supports (Part C) to the legs (Part B) with 6*35 MM bolts (Part AA)