Thank you for your purchase!

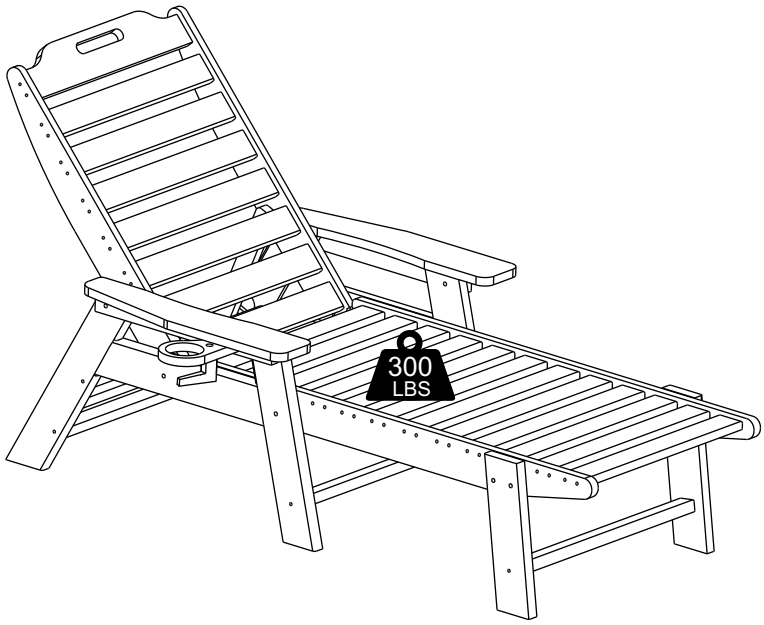

Indoor/Outdoor Poly Resin
Adjustable Adirondack Lounger
With Cup Holder

ASSEMBLY INSTRUCTIONS

Before You Begin:
Please identify all component parts and hardware pieces required before you begin. Carefully remove all of the components from the packaging and set aside for assembly. Assemble on a soft surface to prevent scratching during assembly.

Caution:
Tighten all components securely before use. Failure to do so may result in personal injury. DO NOT use any sharp objects to open plastic wrapped components as damage to product or components may result.

Warning:

CHOKING HAZARD - Small Parts. Adult Assembly Required.

DO NOT ALLOW CHILDREN TO CLIMB ON FURNITURE

Serious or fatal injuries can occur from furniture tipping over. You must install Tipping Restraint Hardware (where included) to help prevent the unit from tipping and causing accidental injury, instability, death or damage. The tipping restraint is intended only as a safety measure, it is not a substitute for proper adult supervision.

To help prevent furniture from tipping over it must be permanently attached to the wall. Anti-Tip Safety Wall Straps suitable for the unit weight and wall materials (if not included) should be purchased and installed.

A	Seat	1pc	1	Hex Bolt M6x60mm	16pcs
B	Right Back Leg	1pc	2	Hex Bolt M6x50mm	8pcs
C	Left Back Leg	1pc	3	Hex Bolt M6x30mm	1pc
D	Right Arm	1pc	4	Nut	16pcs
E	Left Arm	1pc	5	Allen Wrench 5#	1pc
F	Back	1pc	6	Wrench	1pc
G	Back Support Pole	1pc			
H	Front Leg	2pcs			
I	Support Pole	4pcs			
J	Cup Holder	1pc			

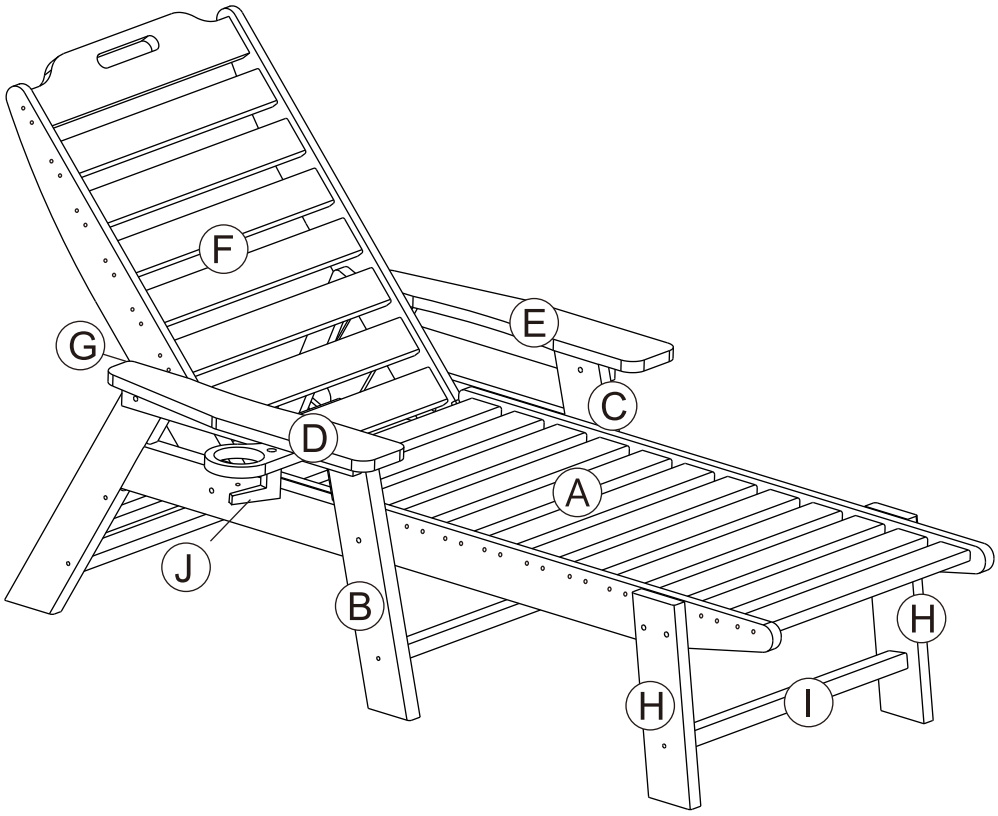

STEP:1

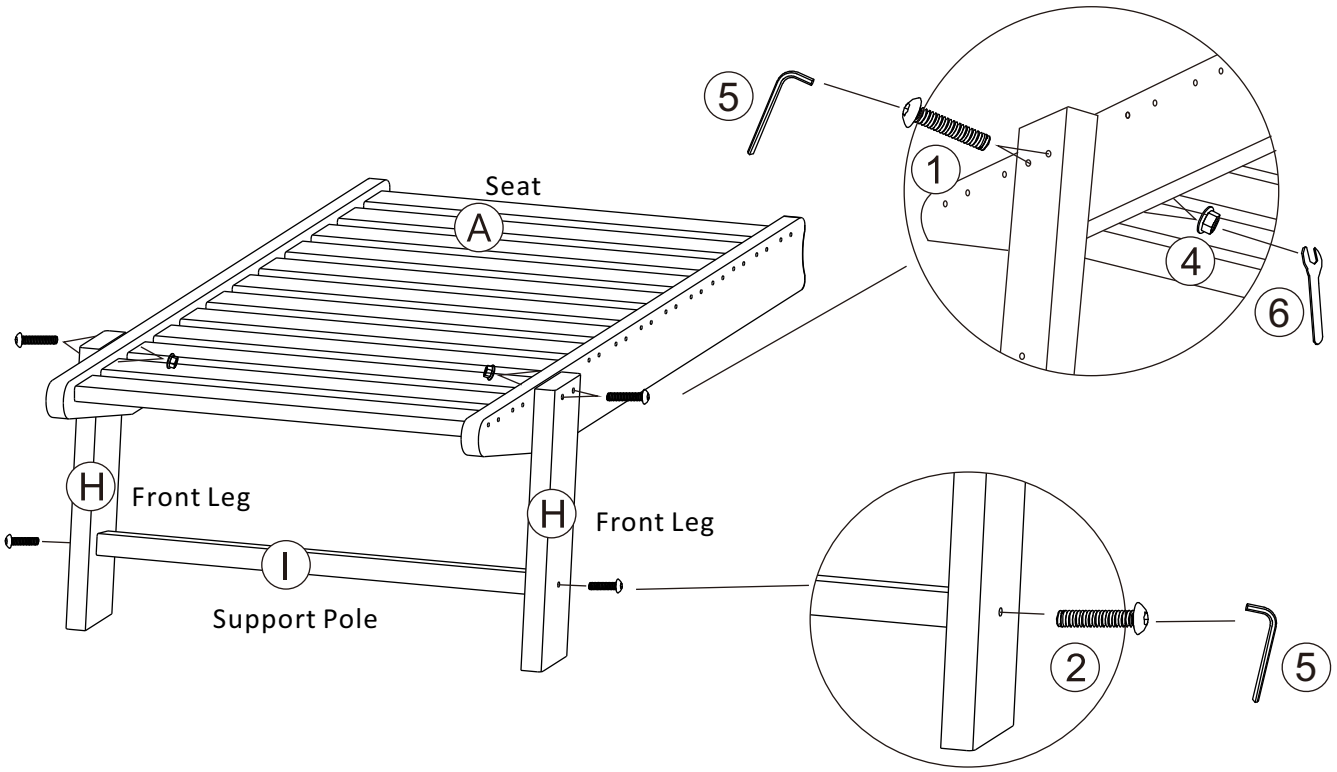
5
1
4
6
Seat
A
H
Front Leg
H
Front Leg
I
Support Pole
2
5

STEP:2

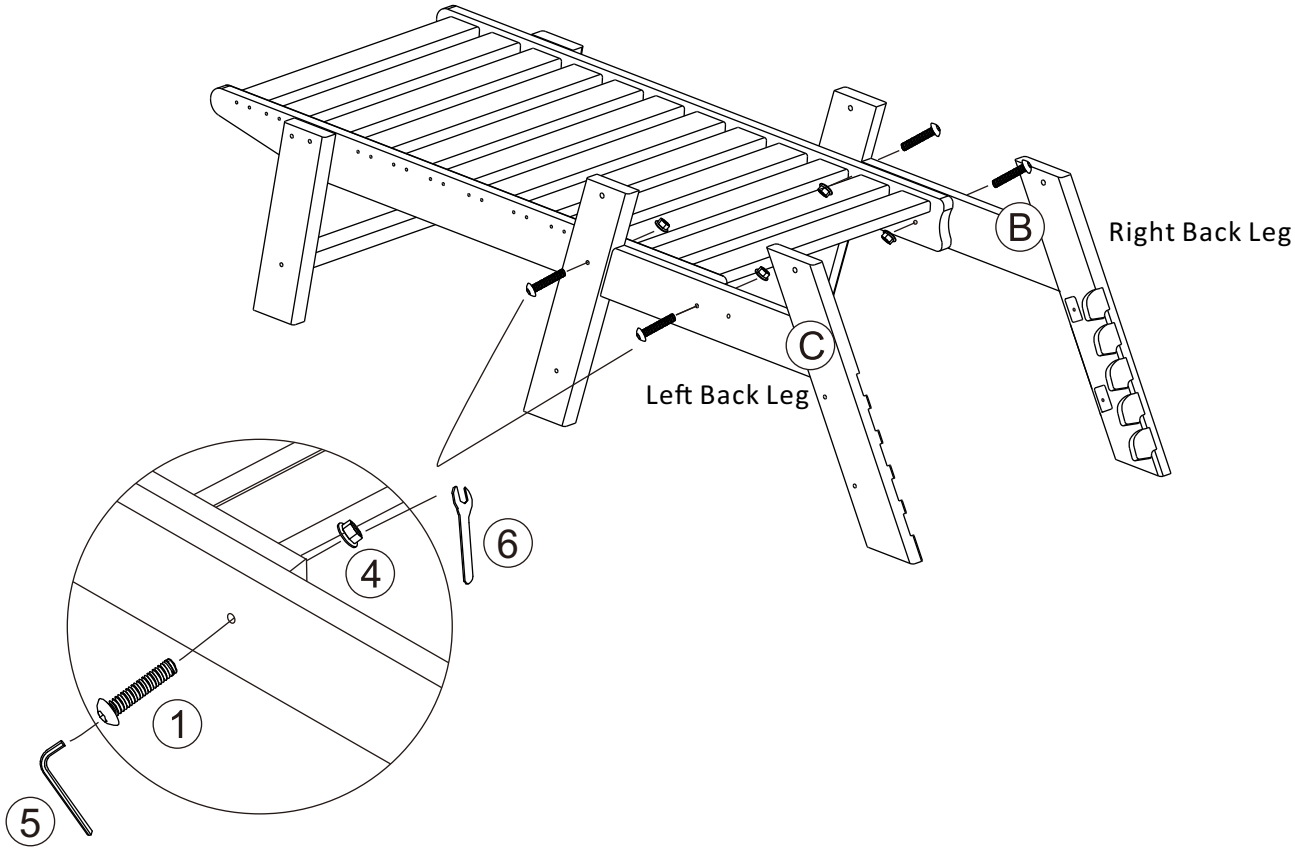
B
Right Back Leg
C
Left Back Leg
6
4
1
5

STEP:3

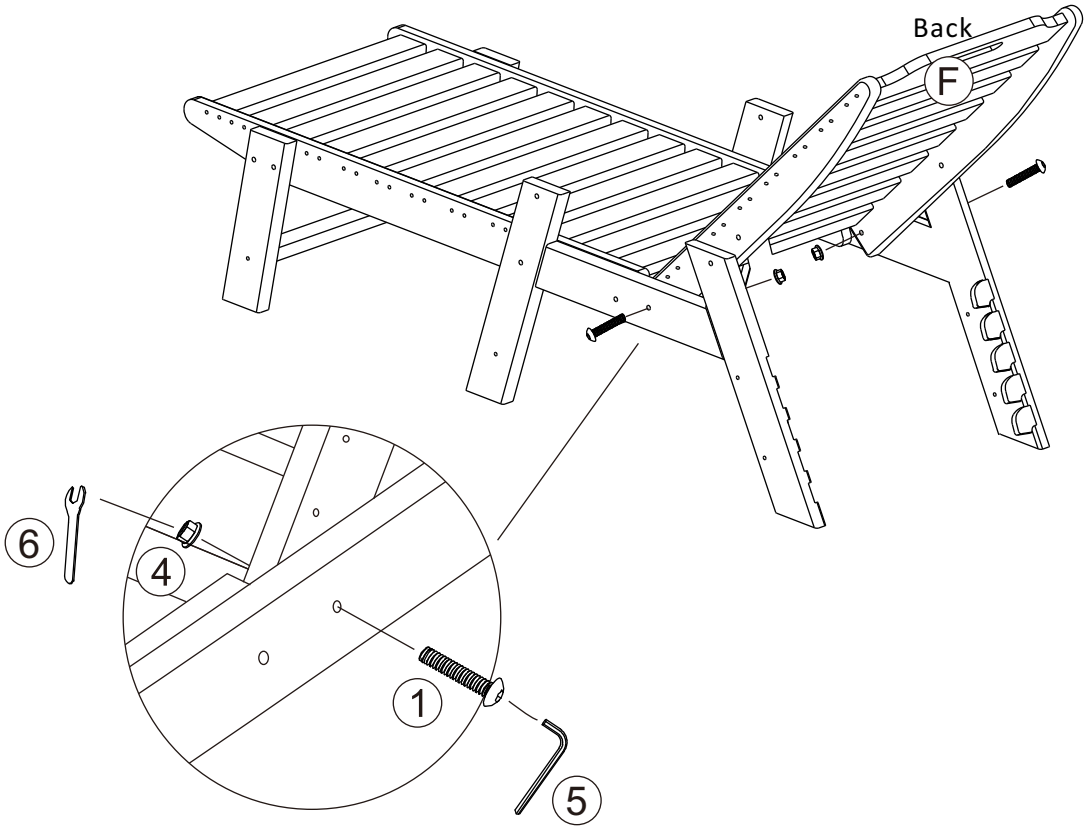
Back
F
6
4
1
5

STEP:4

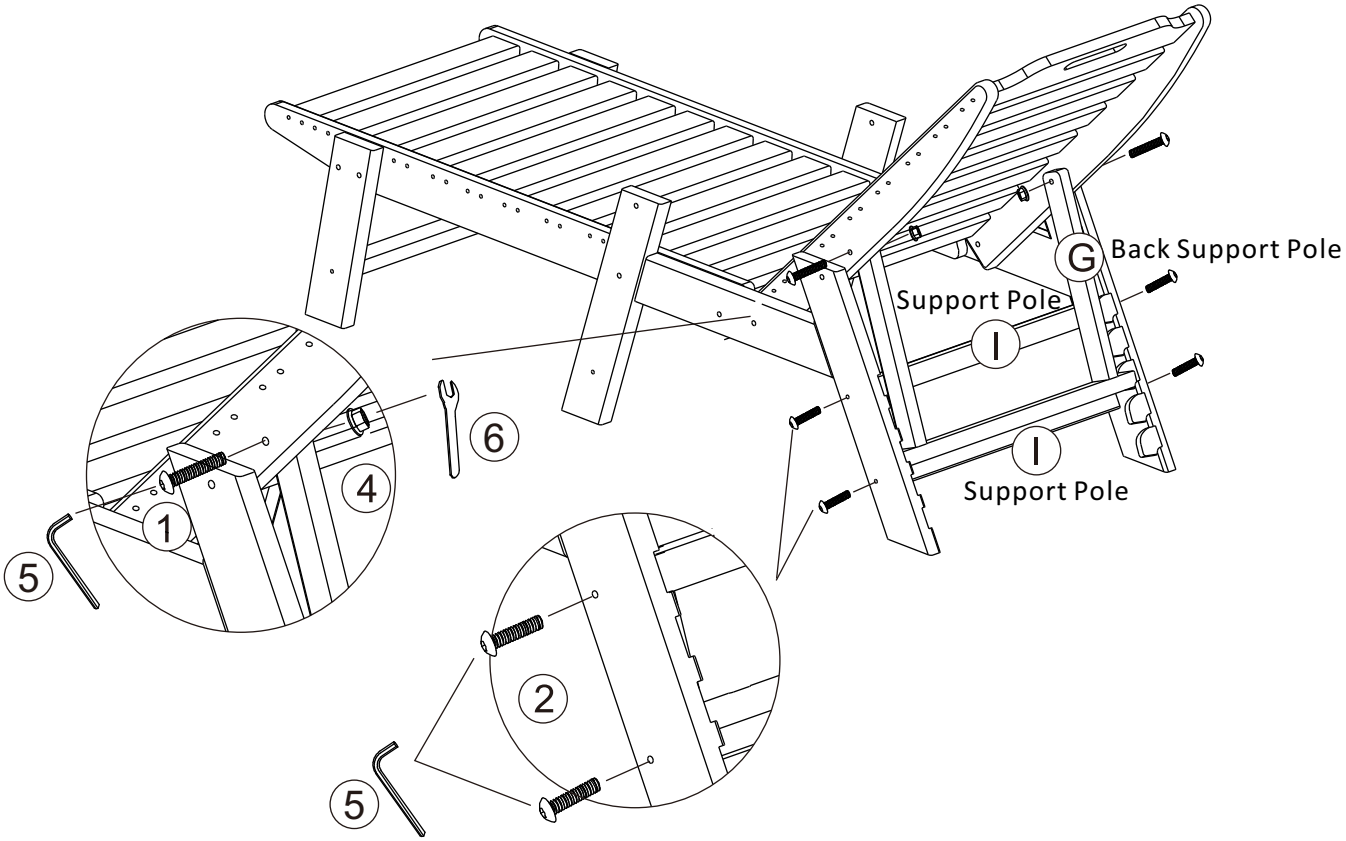
G
Back Support Pole
Support Pole
I
I
Support Pole
6
4
1
5
2
5

STEP:5

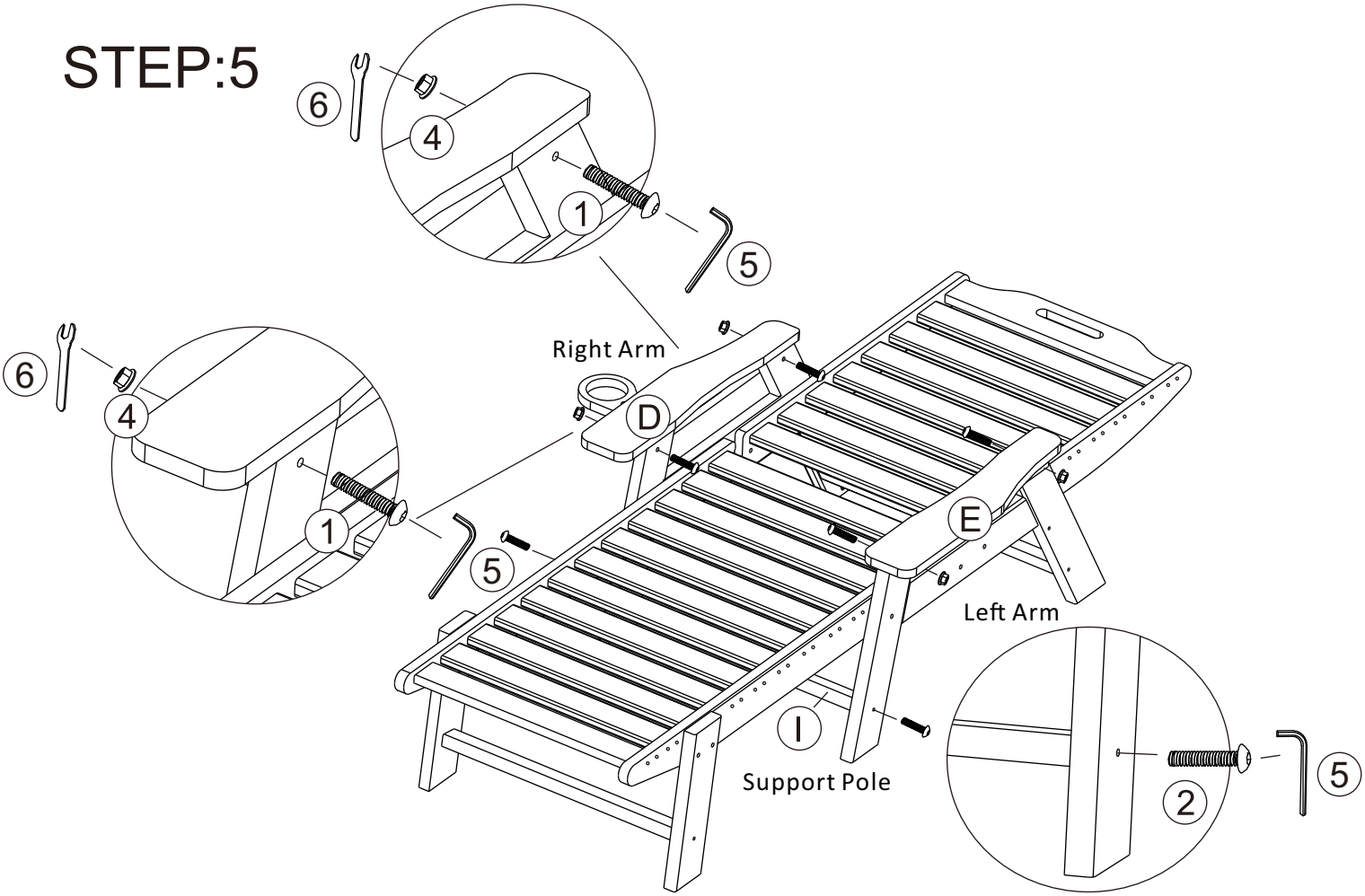
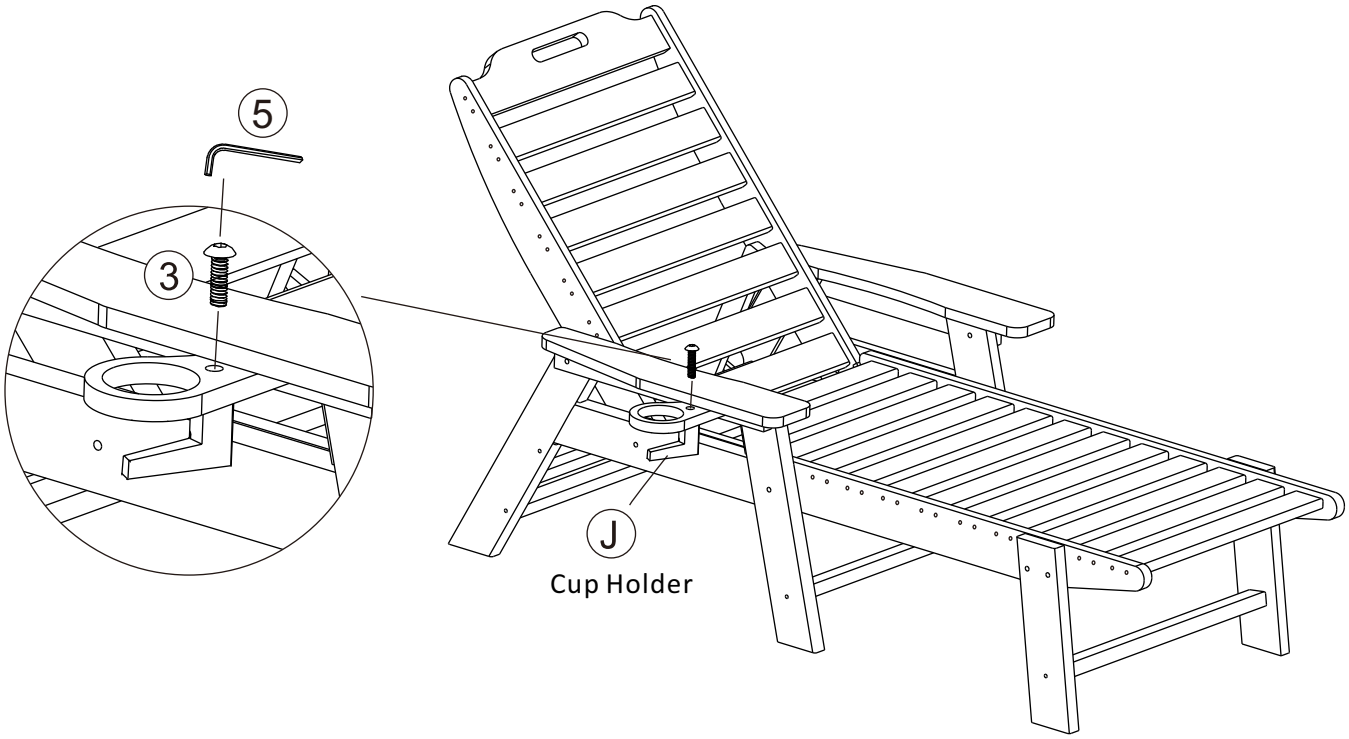
STEP:6