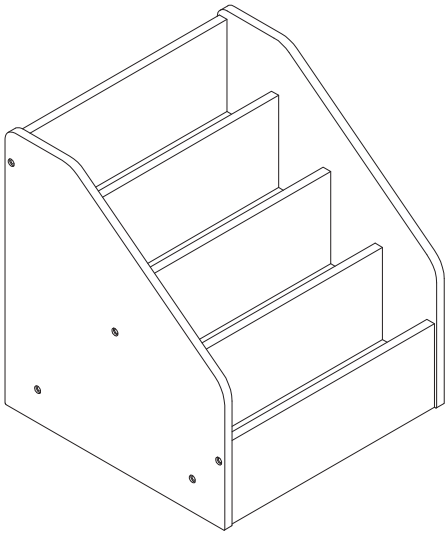

Thank you for your purchase !

Bright Beginnings Modular Wooden Classroom 4 Tier Bookstand - Commercial Grade

ASSEMBLY INSTRUCTIONS

Before You Begin: Phillips screwdriver and rubber hammer (not included) required for assembly

Please identify all component parts and hardware pieces required before you begin. Carefully remove all of the components from the packaging and set aside for assembly. Assemble on a soft surface to prevent scratching during assembly. Phillips screwdriver required for assembly (Not Included).

Caution:

Tighten all components securely before use. Failure to do so may result in personal injury. DO NOT use any sharp objects to open plastic wrapped components as damage to product or componenets may result.

⚠ Warning:

Tighten all components securely before use. Failure to do so may result in personal injury. DO NOT use any sharp objects to open plastic wrapped components as damage to product or componenets may result.

CHOKING HAZARD - Small Parts. Adult Assembly Required.
DO NOT ALLOW CHILDREN TO CLIMB ON FURNITURE.

The tipping restraint is intended only as a safety measure, it is not a substitute for proper adult supervision.

Serious or fatal injuries can occur from furniture tipping over. You must install Tipping Restraint Hardware (where included) to help prevent the unit from tipping and causing accidental injury, instability, death or damage. The tipping restraint is intended only as a safety measure, it is not a substitute for proper adult supervision.

To help prevent furniture from tipping over it must be permanently attached to the wall. Anti-Tip Safety Wall Straps suitable for the unit weight and wall materials (if not included) should be purchased and installed.

⚠ WARNING:
Adult assembly required. This item contains small parts that have sharp points and edges in the unassembled state. Adults must be extra careful to securely tighten all screws, make sure the item is properly assembled, and ensure there are no left-over metal parts (eg. Allen key) within reach of children.



⚠ WARNING:
CHOKING HAZARD - Small Parts.
Not for children under 3 years.

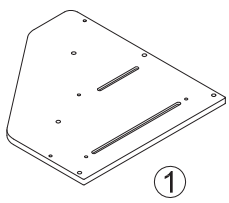

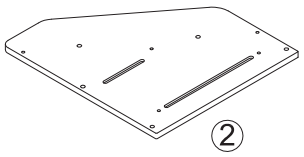

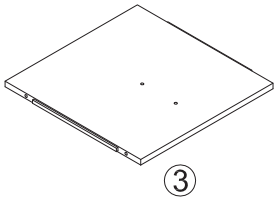

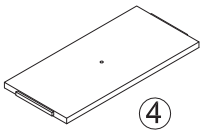

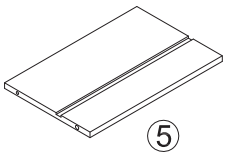

221028

Tools

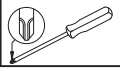



Accessories Included:

M7 x 48	M6 x 7 L42	d15 x 12
SHT-WN-M7X48-01	CAS-FE.6.7X42.3-01	CAS-D15X12-01
A x 13	B x 4	C x 4

M4 x 50	M7 x 17	ALLEN KEY 4
SCW-SS-M4X50-01	I.ABS-WH-D7X17-01	
D x 1	E x 6	F x 1

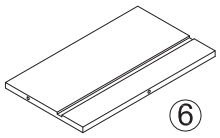

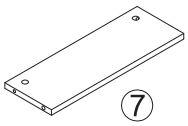

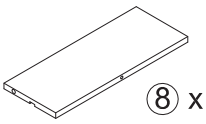

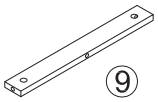

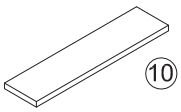

1

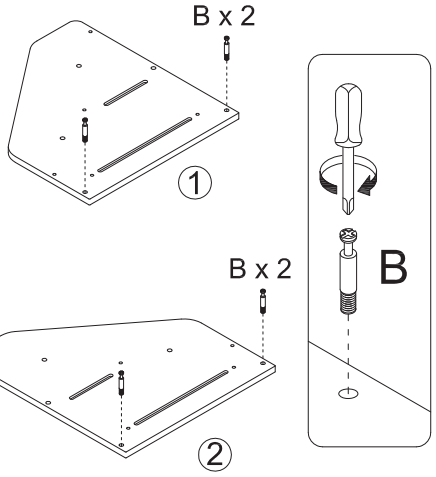

2

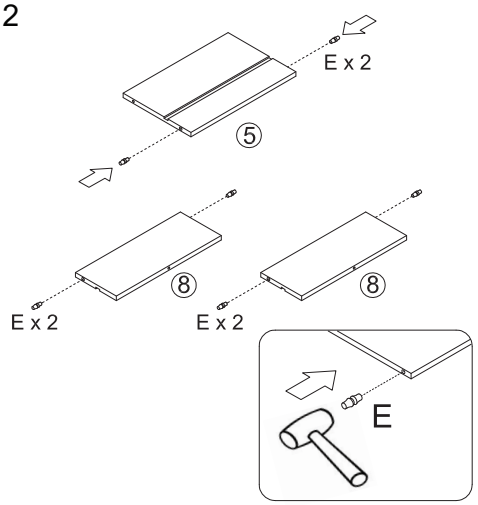

3

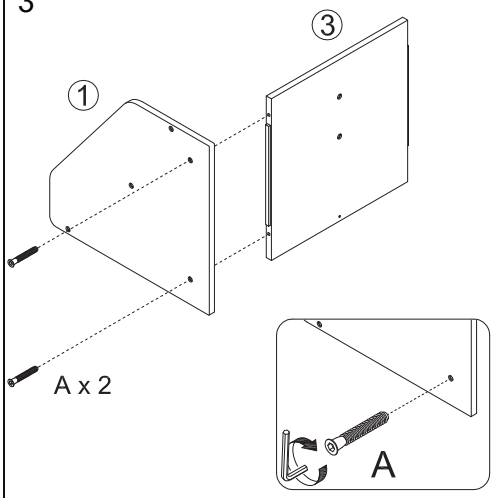

4

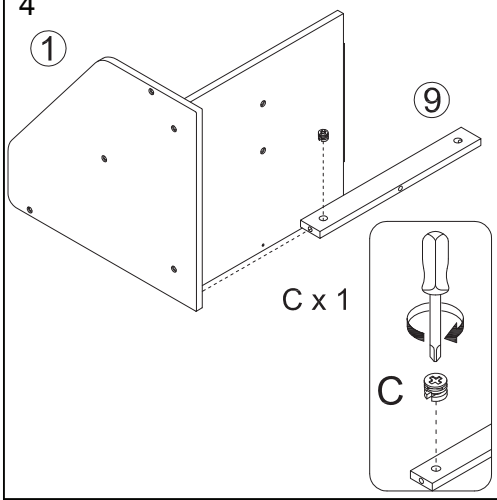

5

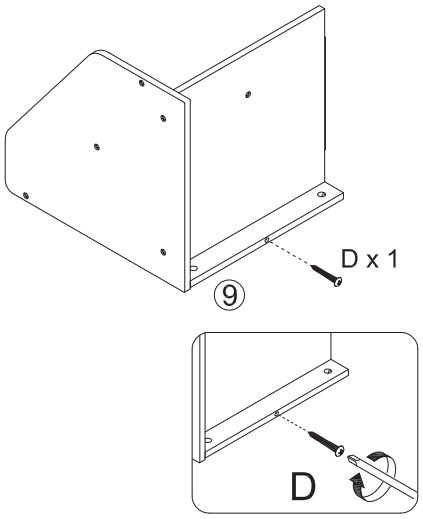

6

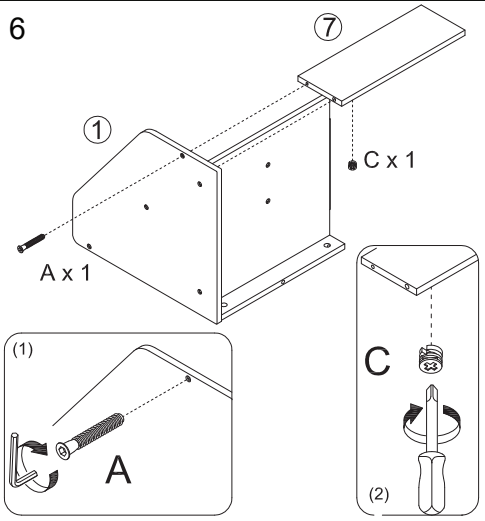

7

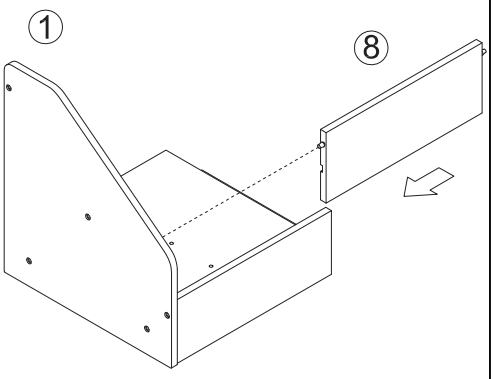

8

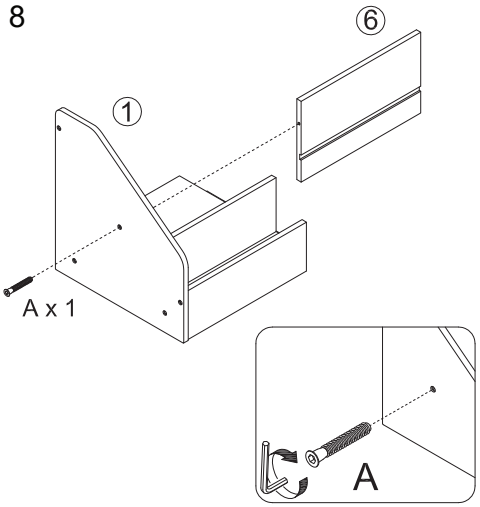

9

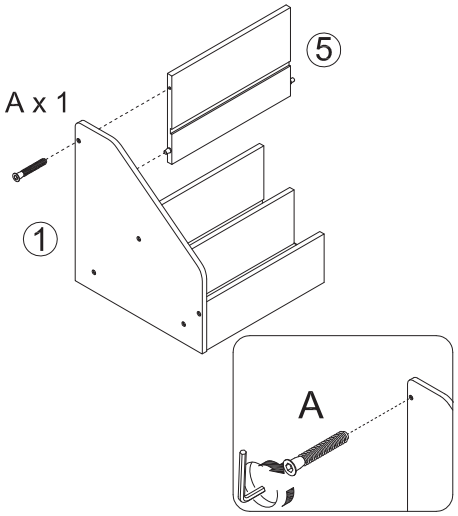

10

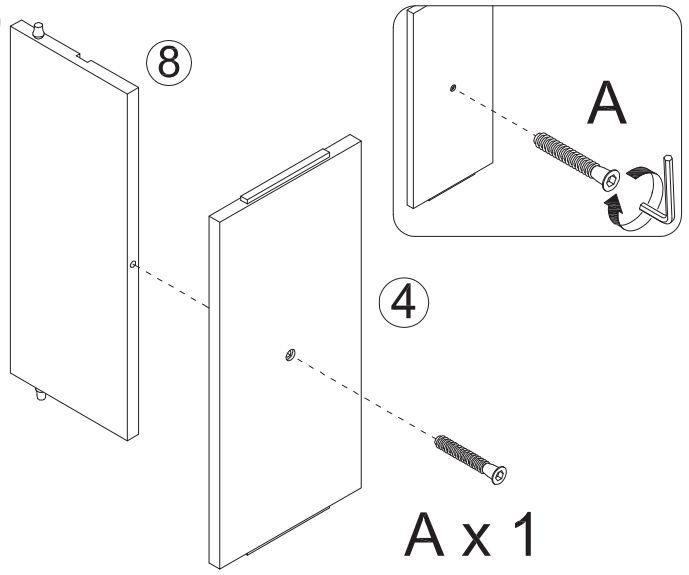

11

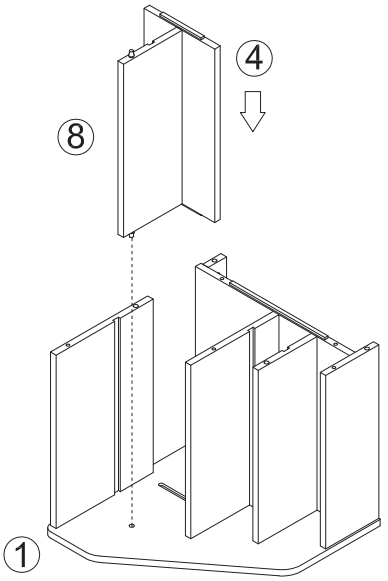

12

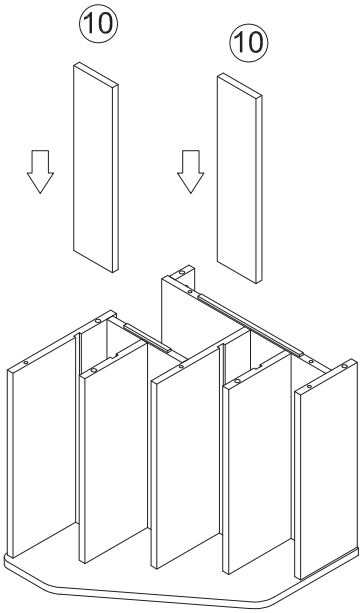

13

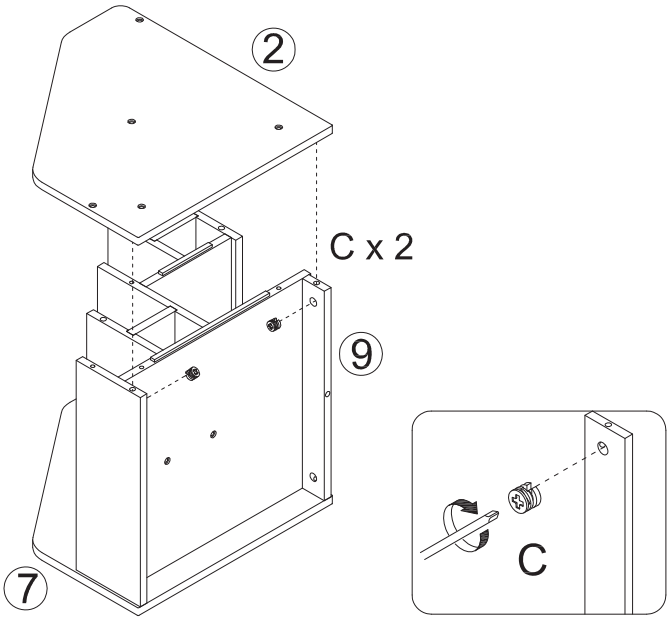

14

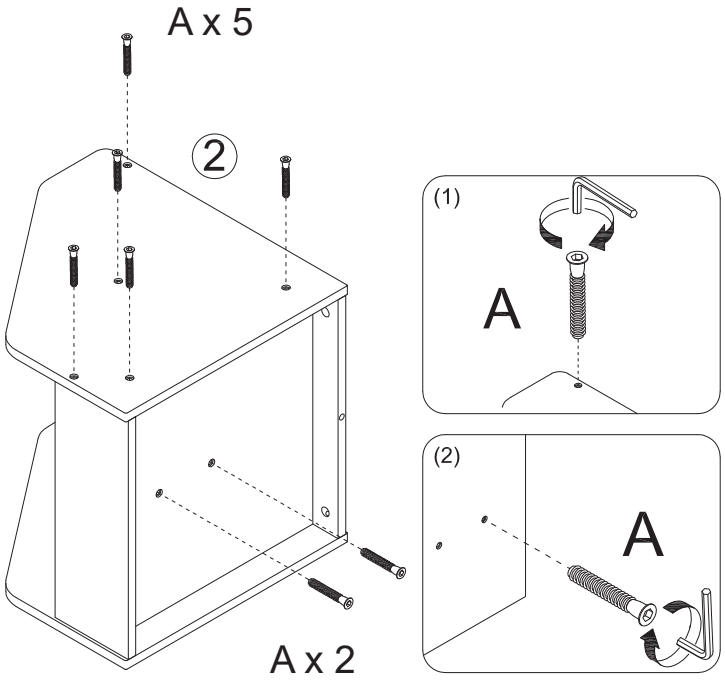

FINISHED

