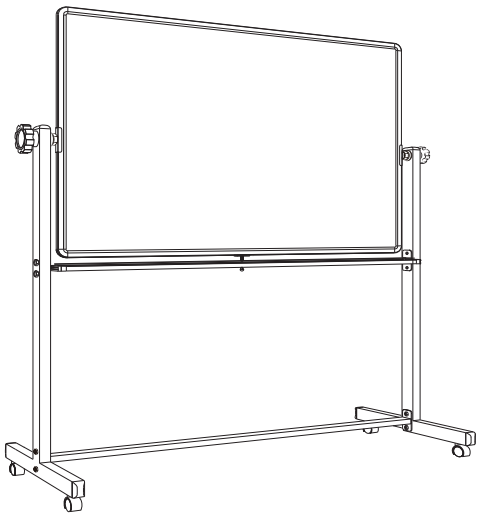

Thank you for your purchase!

Deluxe Mobile Board

ASSEMBLE INSTRUCTIONS

Before You Begin:

Please identify all component parts and hardware pieces required before you begin. Carefully remove all of the components from the packaging and set aside for assemble. Assemble on a soft surface to prevent scratching during assemble.

Caution:

Tighten all components securely before use. Failure to do so may result in personal injury.
DO NOT use any sharp objects to open plastic wrapped components as damage to product or componenets may result.

Warning:

CHOKING HAZARD - Small Parts. Adult Assemble Required.

Injury may result from tipping furniture. You must install the Tipping Restraint Hardware with the unit to prevent the unit from tipping and causing any accidental injury, instability, death or damage. The tipping restraint is intended only as a safety measure, it is not a substitute for proper adult supervision.

This tipping restraint is not an earthquake restraint. If you wish to add the extra security of earthquake restraints, they must be purchased and installed separately.

Serious or fatal crushing injuries can occur from furniture tipping over. To prevent furniture from tipping over it must be permanently fixed to the wall. Fixing devices for the wall are not included since different wall materials require different types of fixing devices. Use fixing devices suitable for the walls in your home.

Failure to detach this restraint before moving furniture may result in injury or damage.

DO NOT ALLOW CHILDREN TO CLIMB ON FURNITURE

Parts

NOTE: Teamwork Required.

#	PART LIST	Q' TY
A	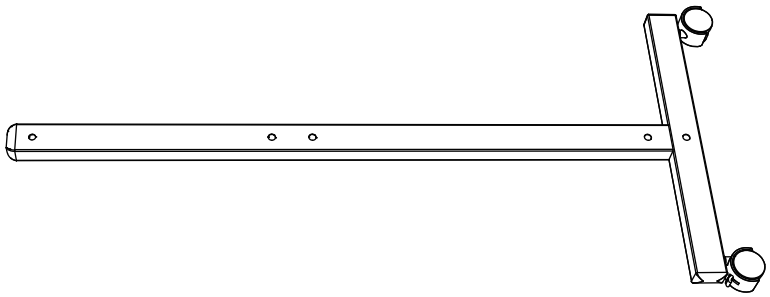	2
B	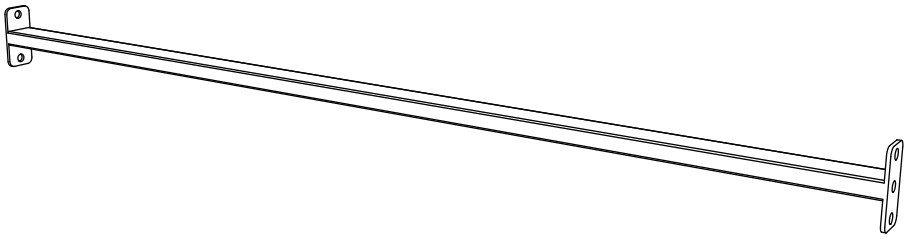	1
C	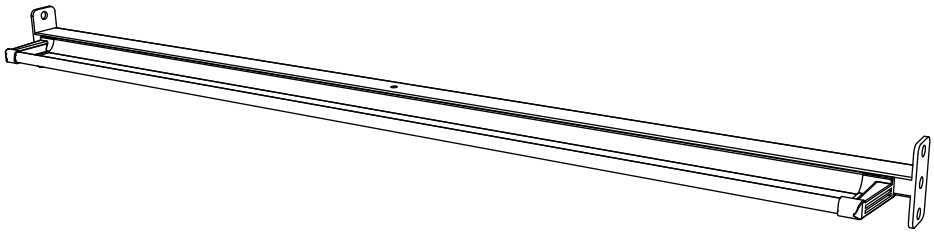	1
D	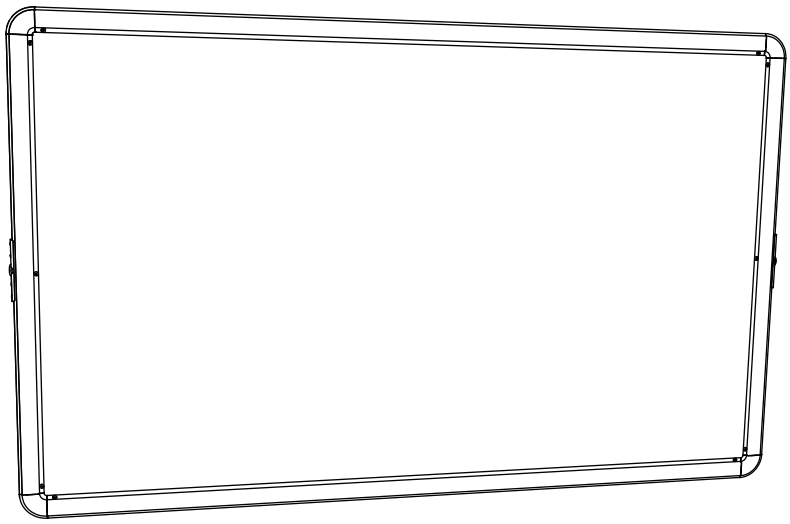	1

Thank you for your purchase!

Parts

NOTE: Teamwork Required.

HARDWARE LIST

#	HARDWARE	SPEC	Q'TY
1		Lock nuts	8 Pieces
2	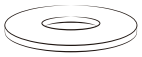	Washers	10 Pieces
3		M10*43 Bolts	8 Pieces
4		Set screw	1 Pieces
5		Flange nuts	2 Pieces
6	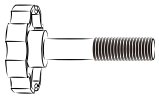	Hand wheels	2 Pieces
7	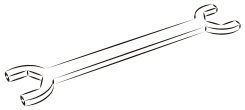	Wrench	1 Pieces

Thank you for your purchase!

STEP 1

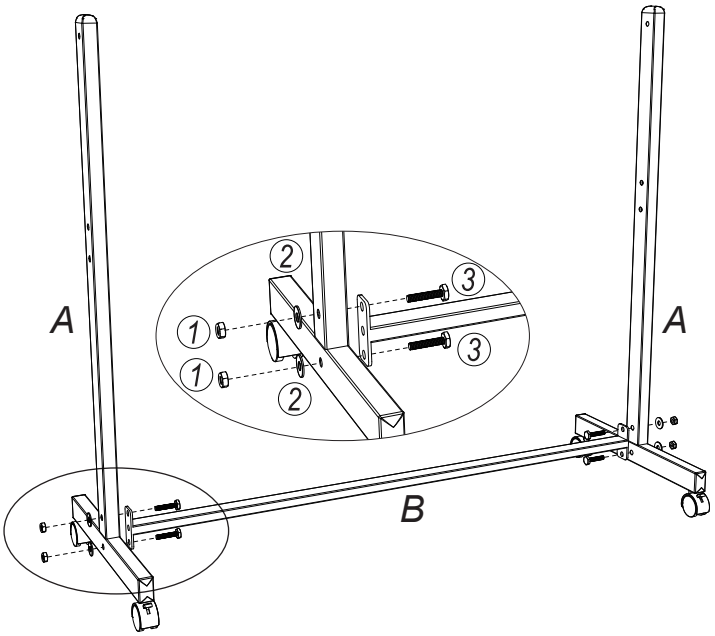

Assemble buttom part of support. Make sure the casters are on the same side.

STEP 2

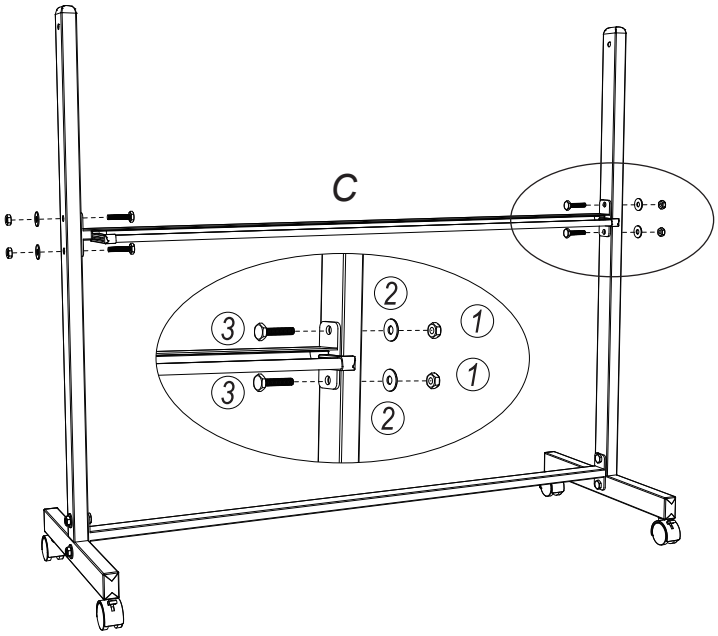

Thank you for your purchase!

STEP 3

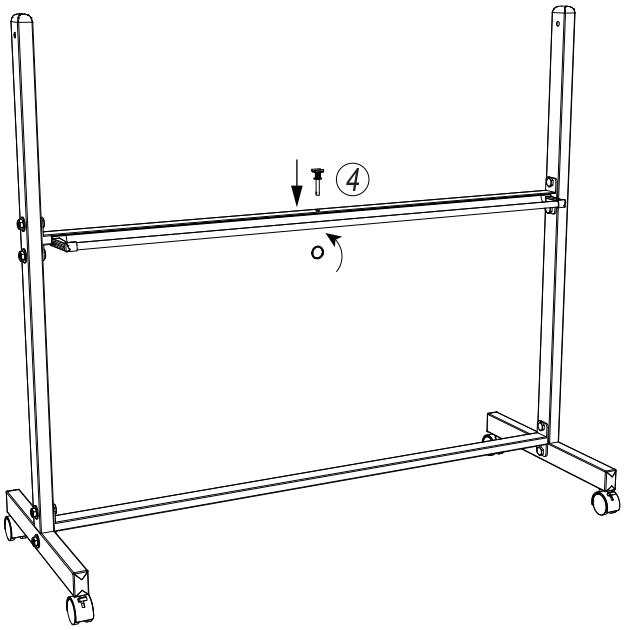

Assemble set screw.

STEP 4

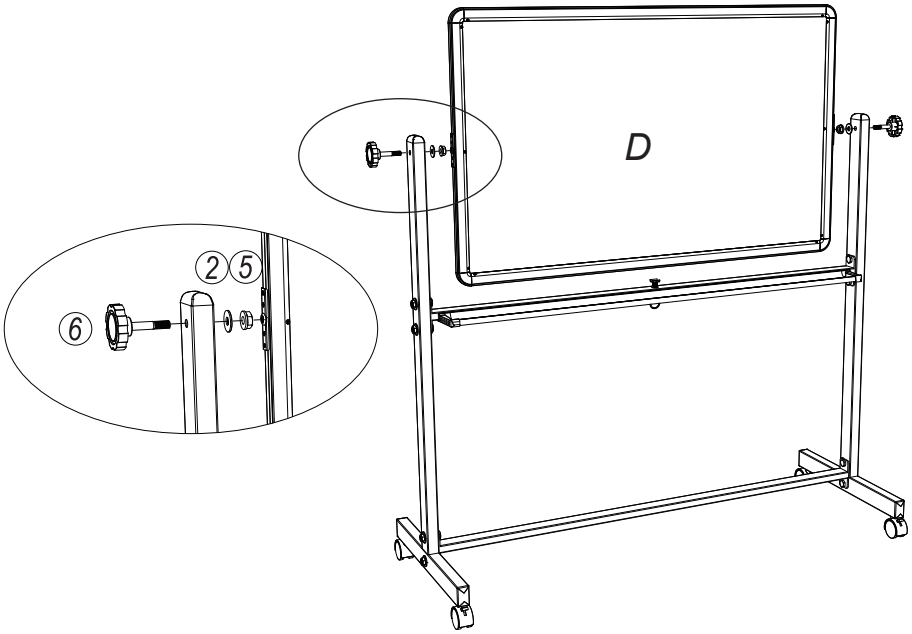

Assemble white board.

Thank you for your purchase!

STEP 5

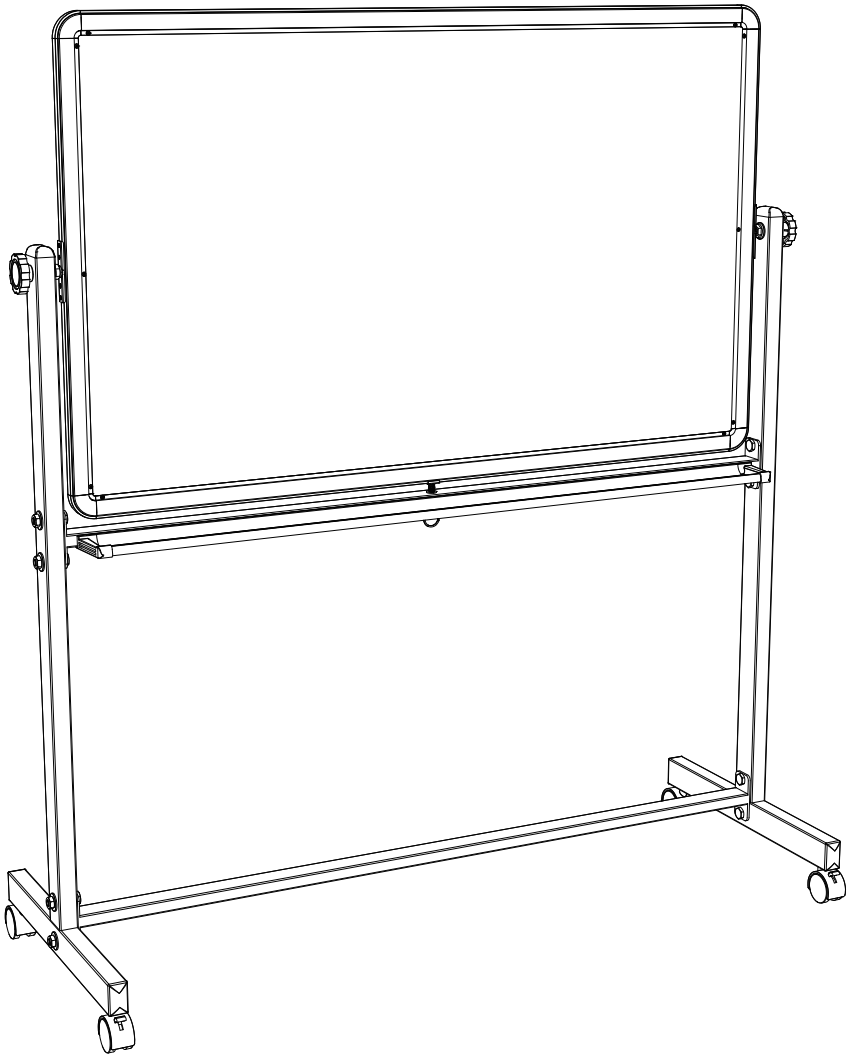

Final.

Thank you for your purchase!