TABLE ASSEMBLY INSTRUCTIONS

PARTS LIST

- Ⓐ Tabletop
- Ⓑ Leg(4)
- Ⓒ Short Bolt(12)
- Ⓓ Split Washer(12)
- Ⓔ Phillips Screw(8)
- Ⓕ Allen wrench(1)
- Ⓖ Set screws(4)

NOTE:
A Phillips Head Screwdriver will be needed for assembly (not included)

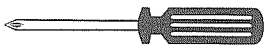

⚠ WARNING:

- **Adult Assembly Required.** Two Adults Recommended.
- Contains small parts, sharp points and edges.
- Do not stand, sit, kneel, climb, lean or pull on unit for support.
- Never leave children unattended.
- Adult Supervision Recommended.

TIPS!
DO NOT FULLY TIGHTEN SCREWS UNTIL ALL SCREWS HAVE BEEN LOOSELY POSITIONED.

* BEFORE ASSEMBLING, MAKE SURE THERE ARE NO MISSING PARTS *

1 Place the Tabletop(A) face down on a carpet or protected surface as shown.

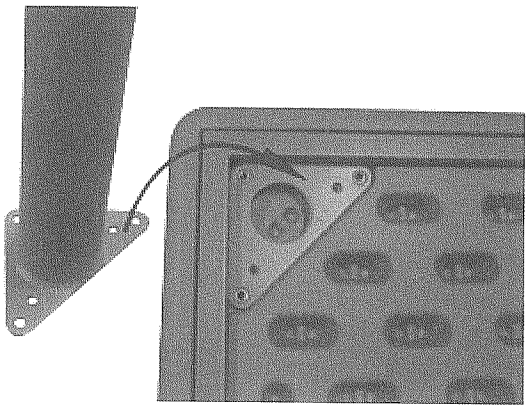

2 Position the Leg(B) so the holes in the Leg Mount Plate align with the holes in the Tabletop(A) frame as shown. Insert 3 Split Washers(D) onto the 3 Short Bolts(C), and insert into the 3 corner holes. Tighten with a Phillips Head Screwdriver.

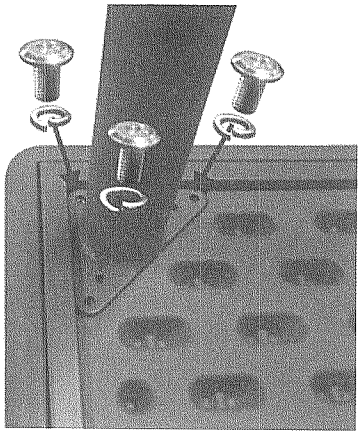

3 Insert 2 Phillips Screws(E) into the 2 inner Leg(B) holes as shown. Tighten with a Phillips Screwdriver.

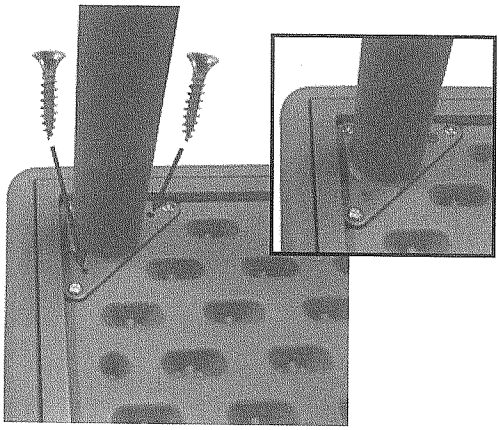

4 Repeat Steps 1, 2 and 3 to attach the 3 other Legs(B). Tighten all screws completely.

Adjust Leg(B) "Feet" to the desired height. Make sure Legs(B) are the same height.

Two Adults Recommended: Carefully turn the table upright.

You're done!

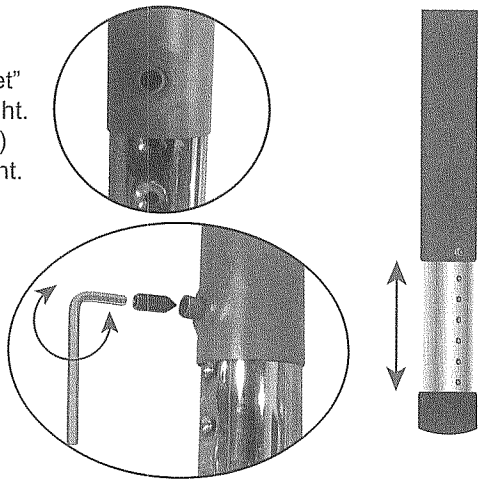

THE INSTALL INSTRUCTION FOR
SPECIL COMBINED AND FIXED CHILDREN TABLE

Applicable model:
Table top with injected edging(YCY Series)

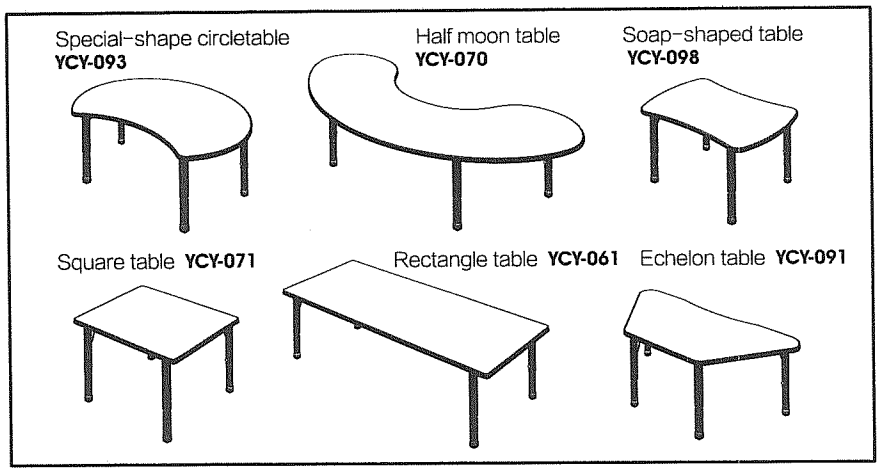

Installation accessories

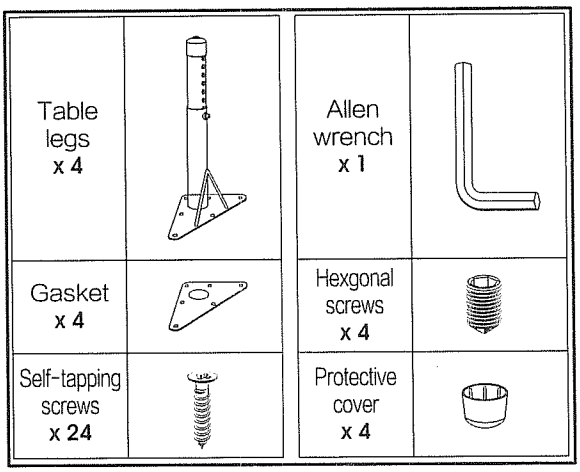
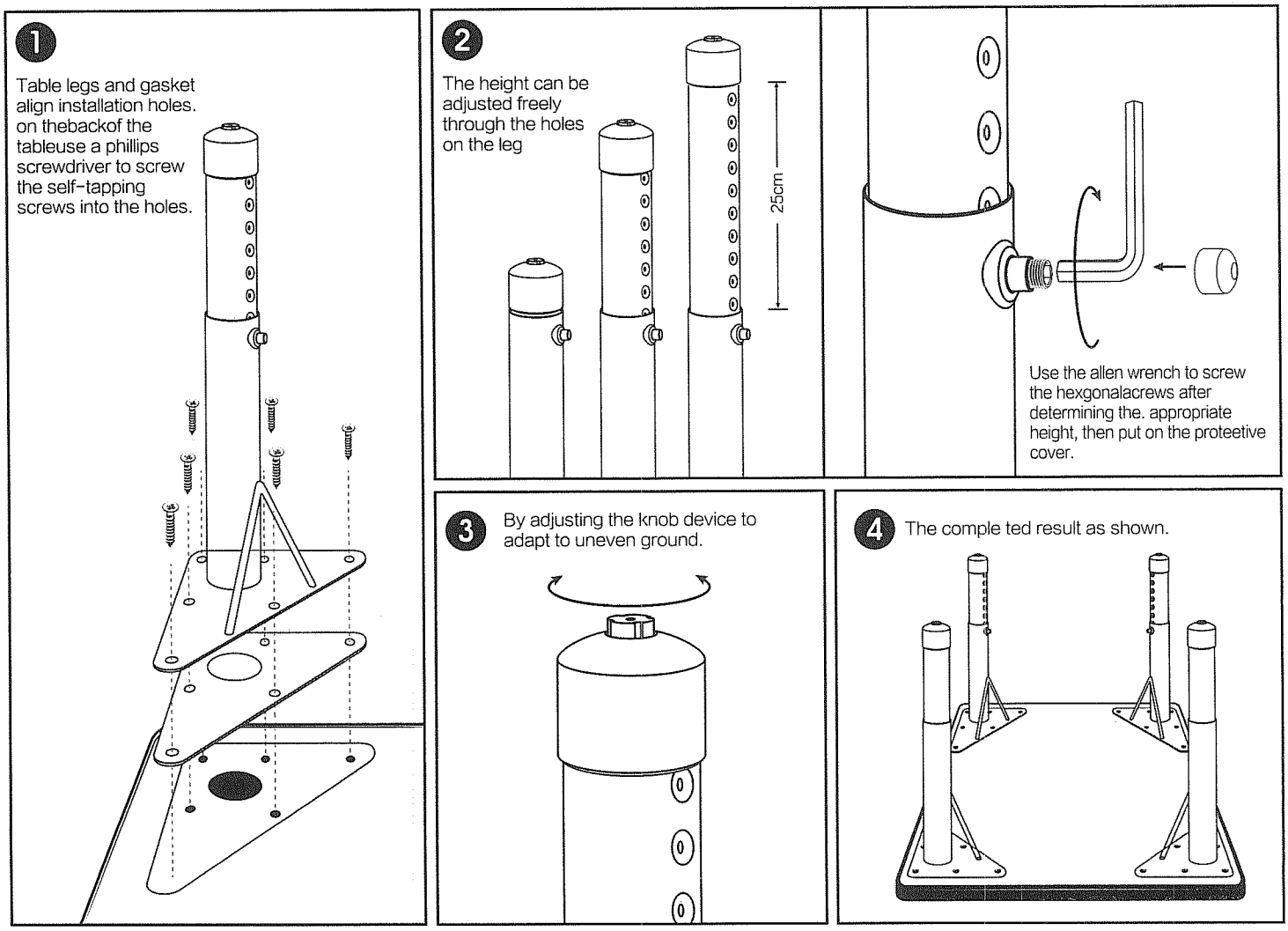
Installation diagram